Round Cube 2.4 / 2.6

Construction guide

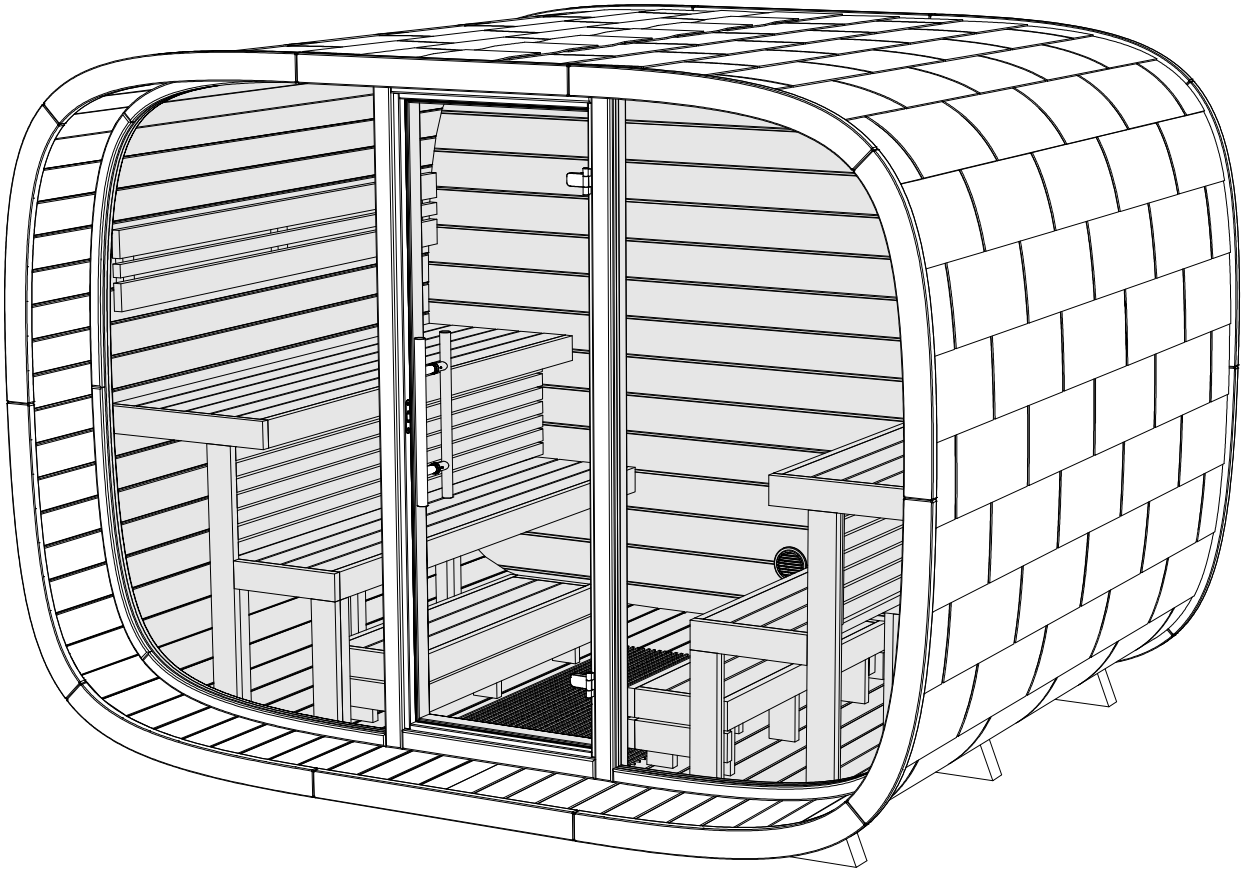

Check the parts for completeness before assembly!

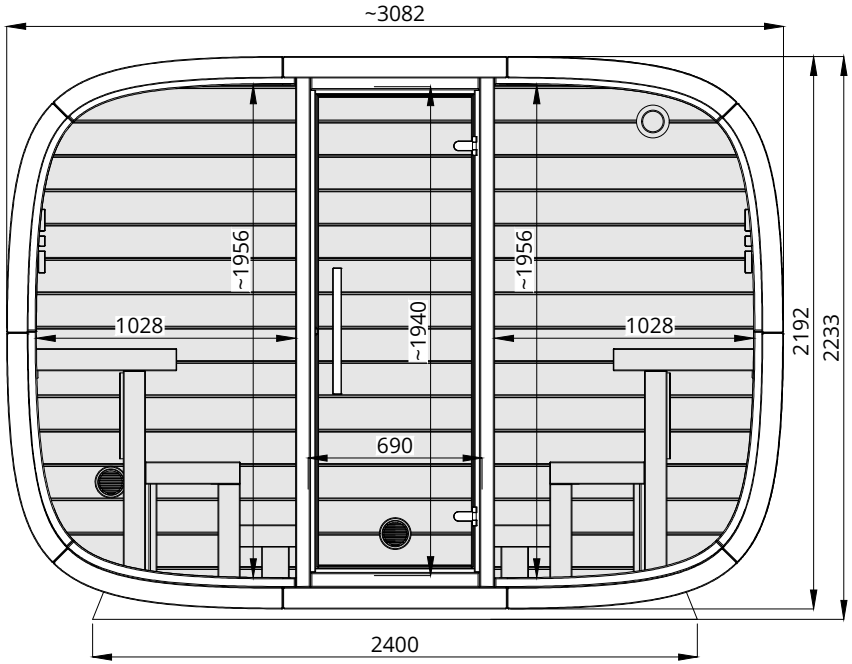

Front view

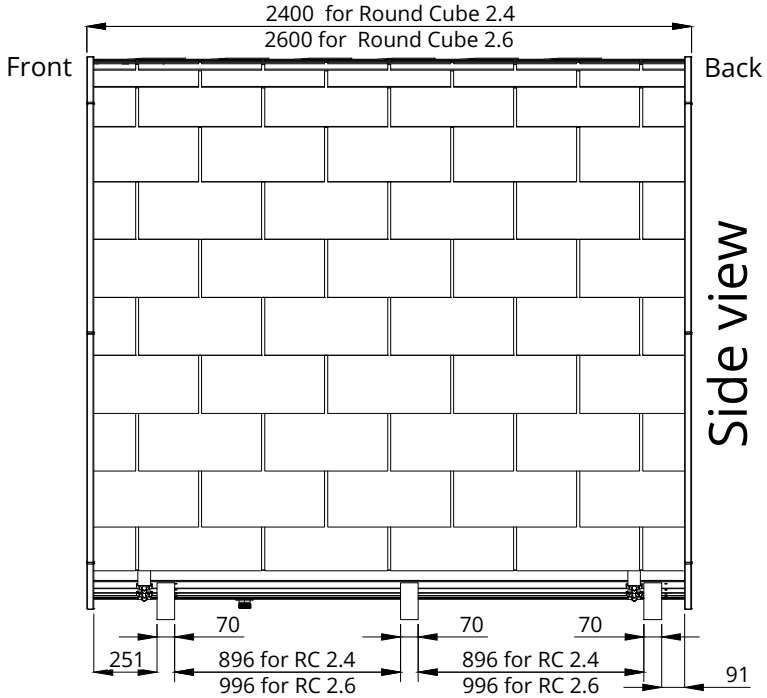

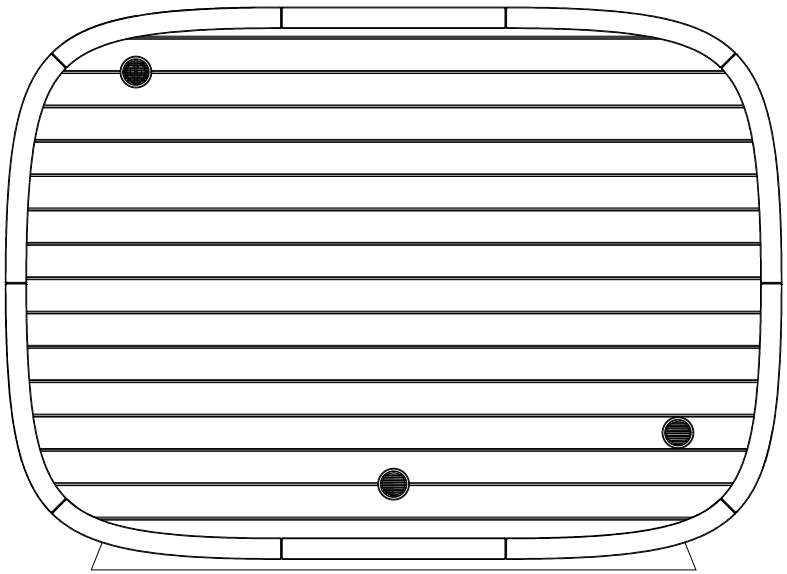

Back view

Scale 1 : 30

Round Cube

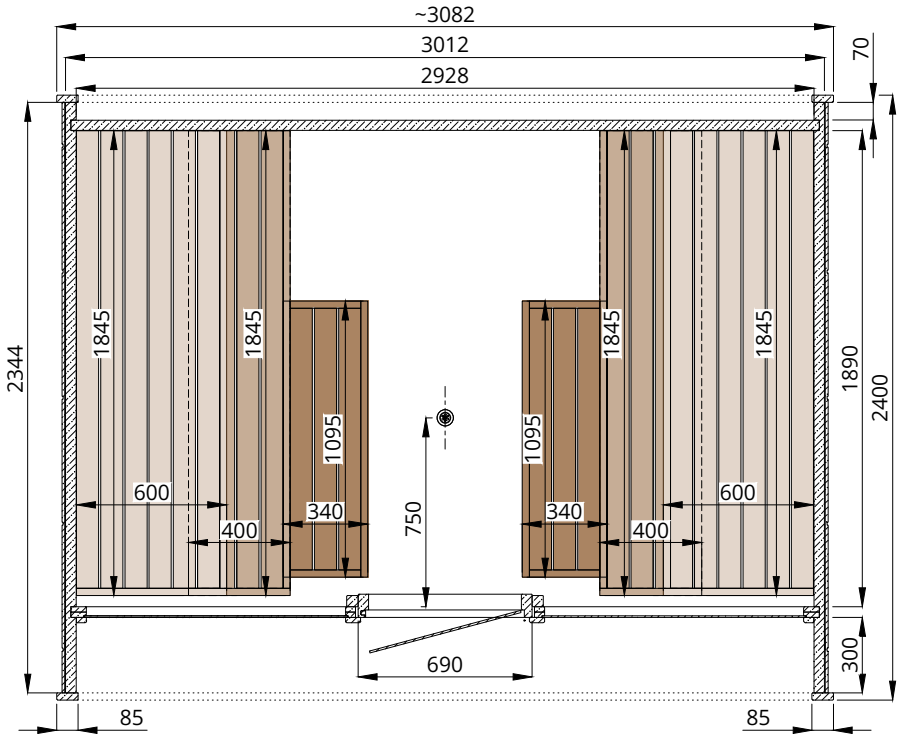

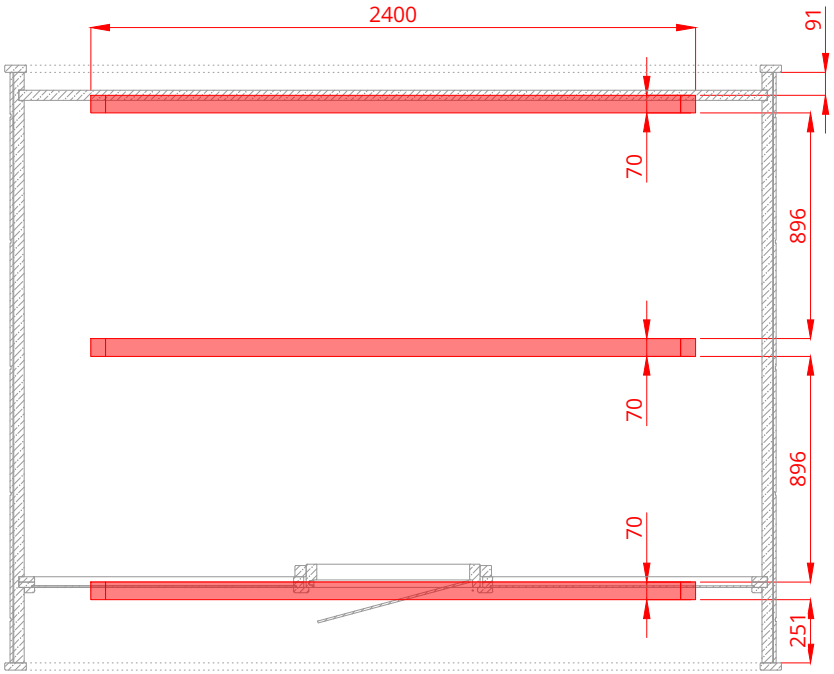

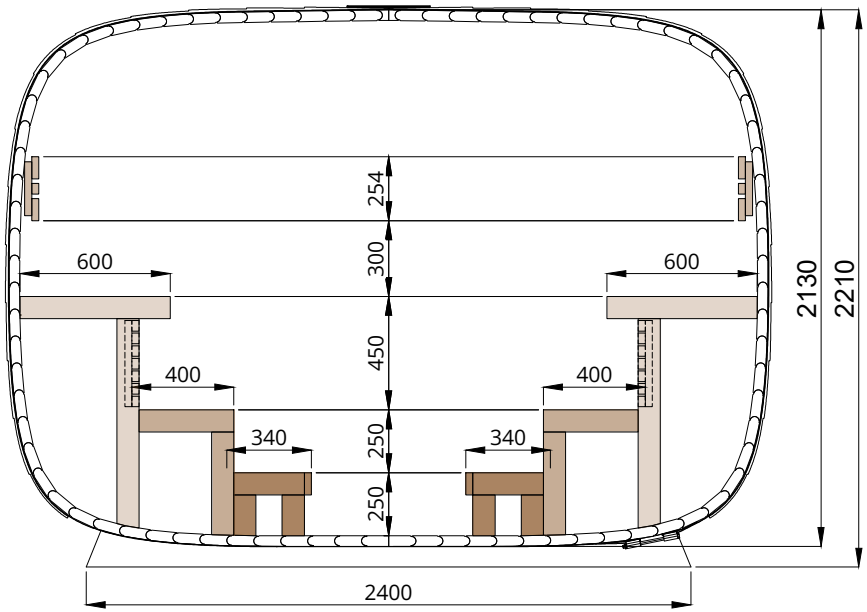

Scale 1 : 30

Round Cube 2.4

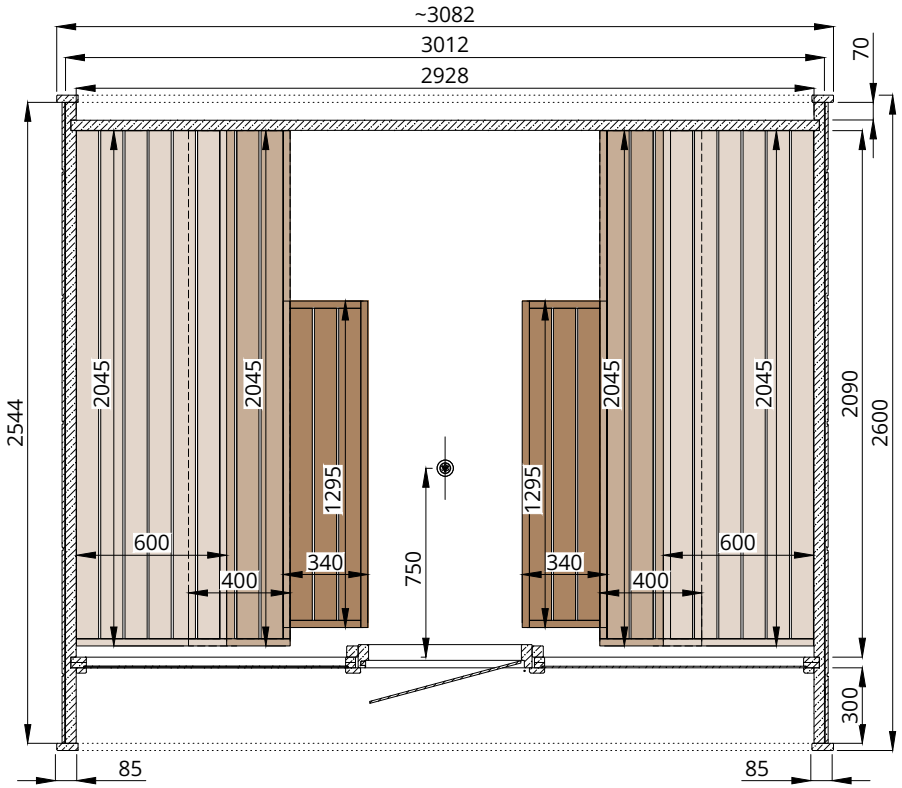

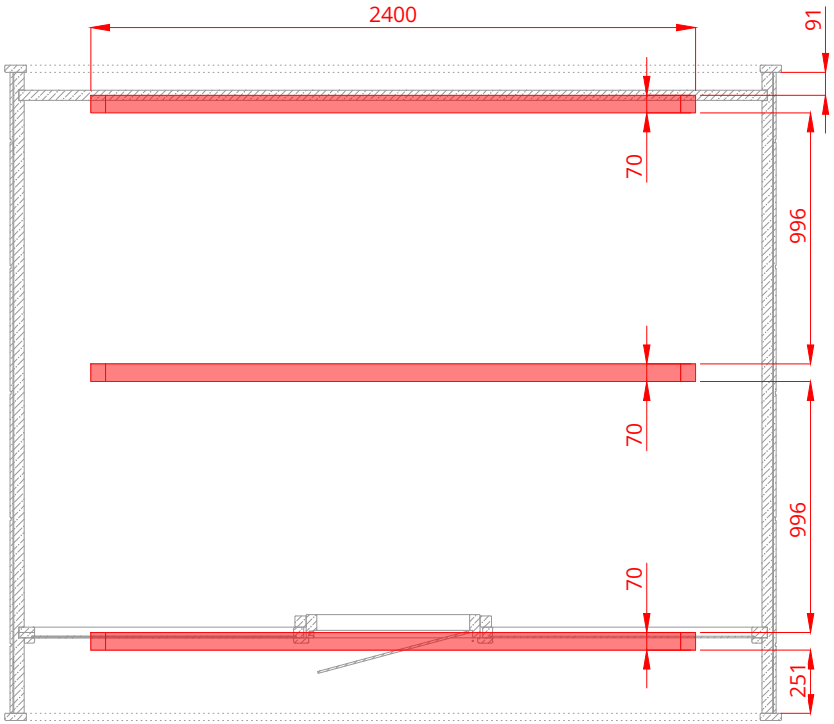

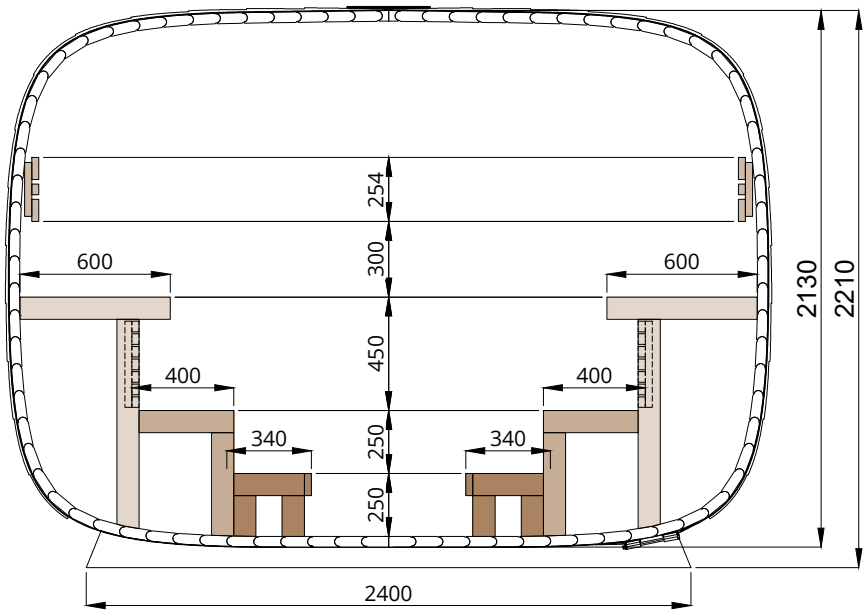

Scale 1 : 30

Round Cube 2.6

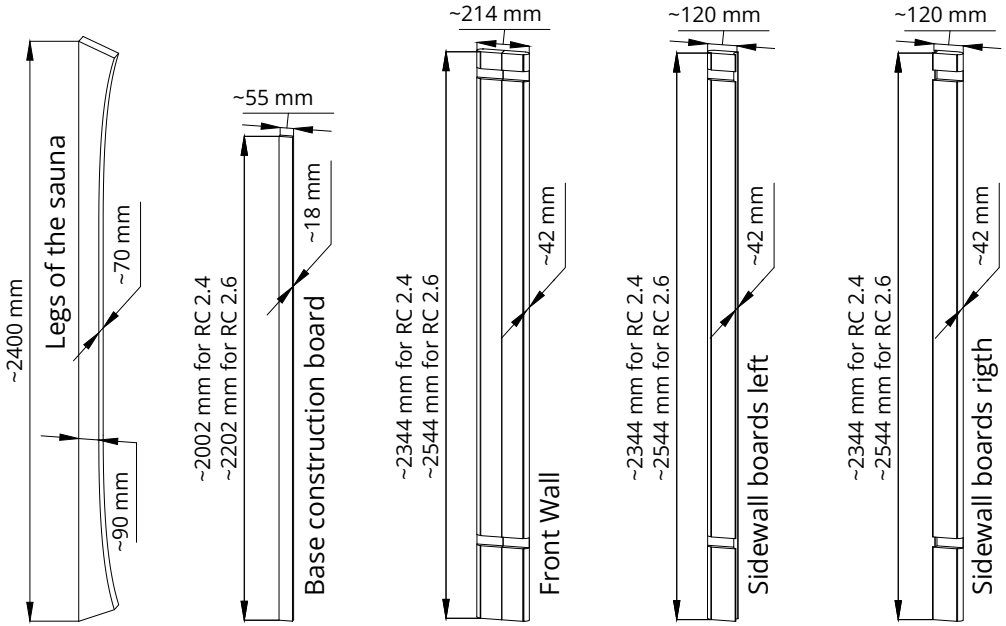

B1 3 x

B2.1 2 x

B3 1 x

B3a 44 x

B3b 44 x

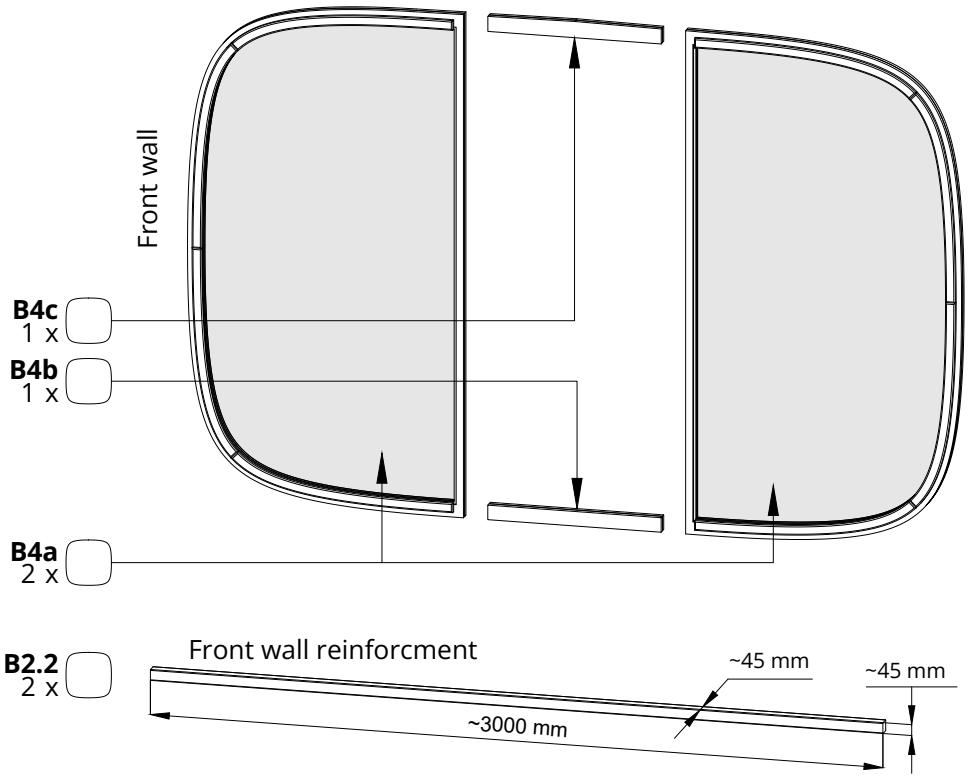

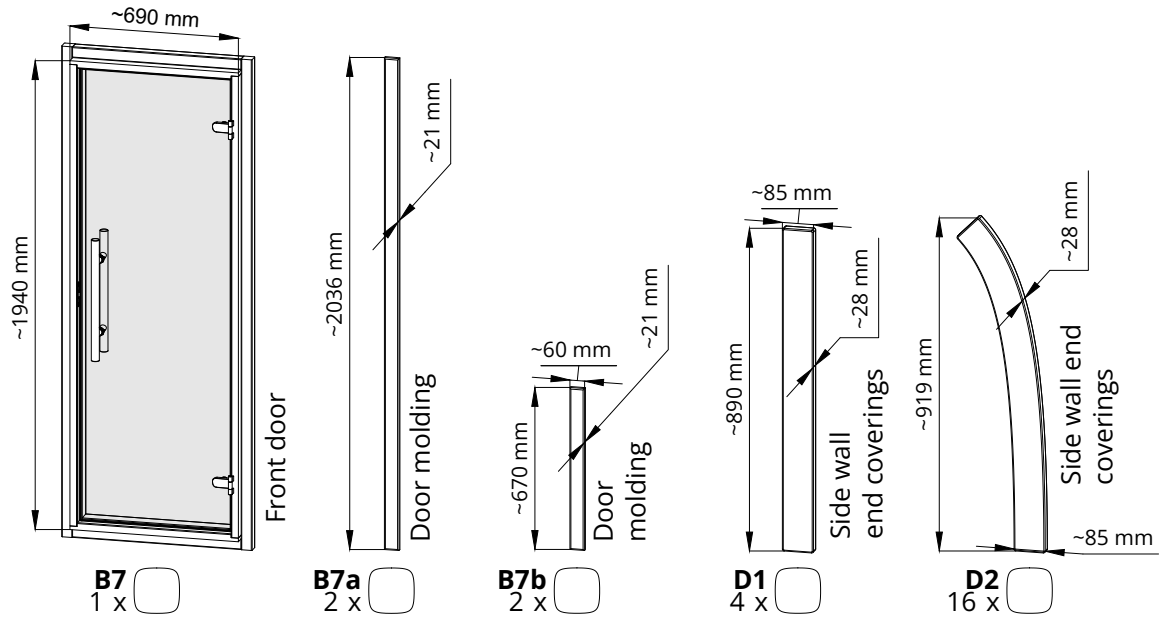

B7 1 x

B7a 2 x

B7b 2 x

D1 4 x

D2 16 x

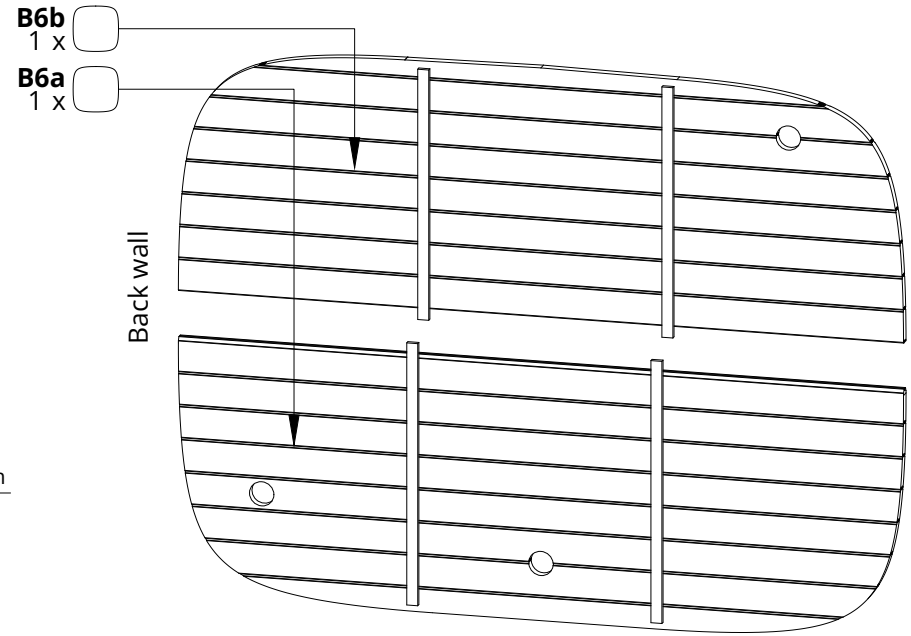

Detail list 1

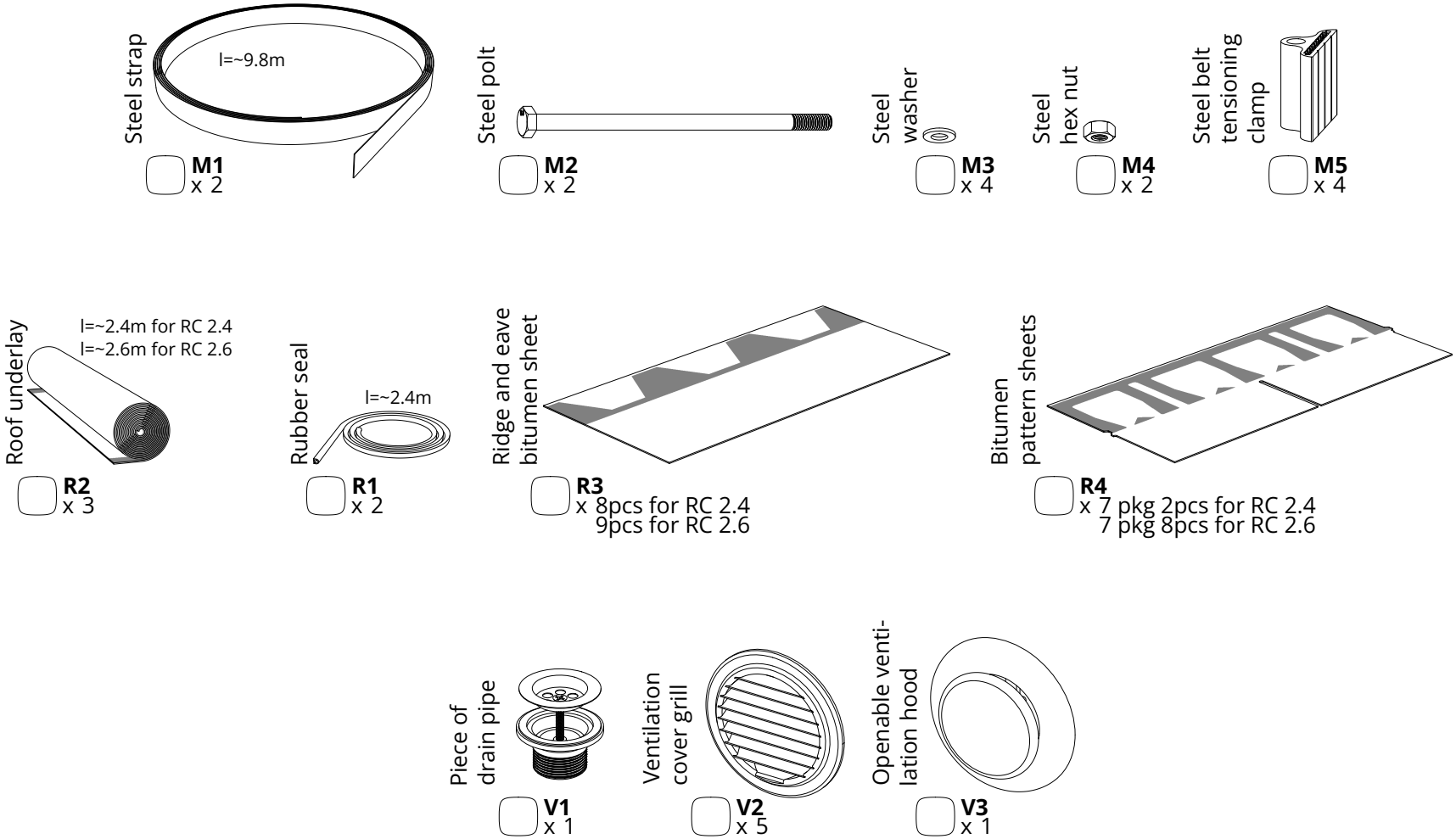

Detail list 2

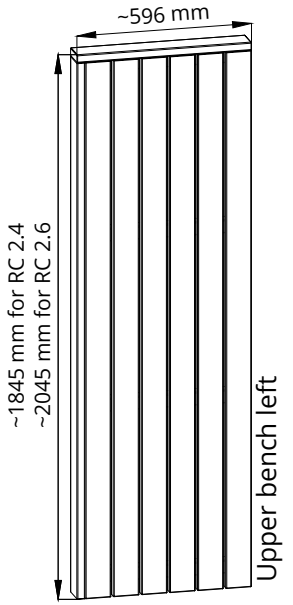

I1a
x 1

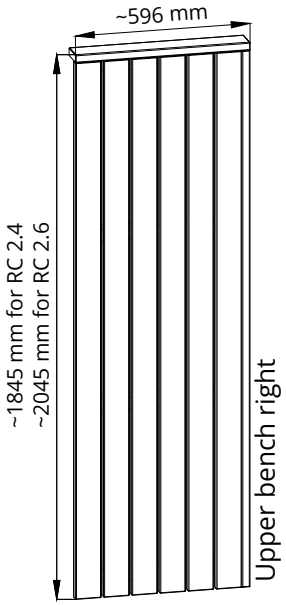

I1b
x 1

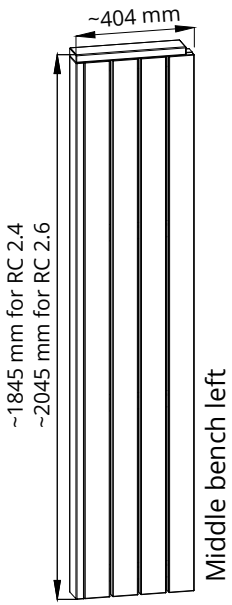

I2a
x 1

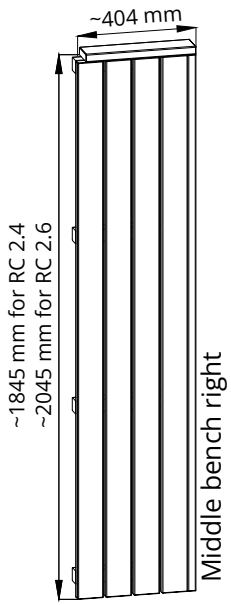

I2b
x 1

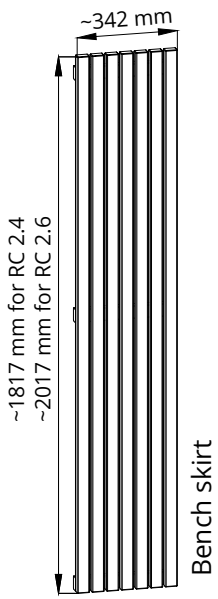

I3
x 2

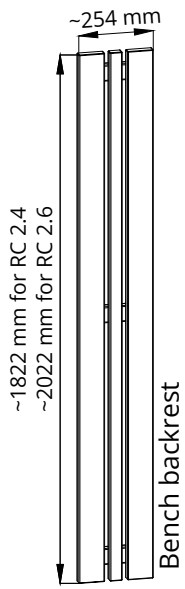

I4
x 2

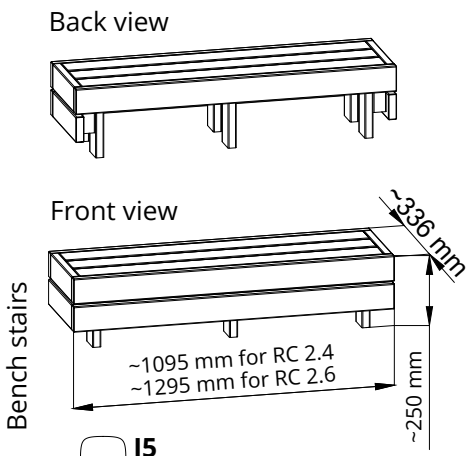

I5
x 2

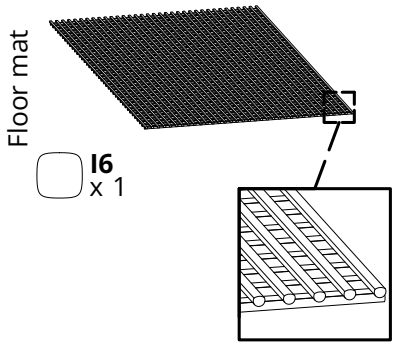

I6
x 1

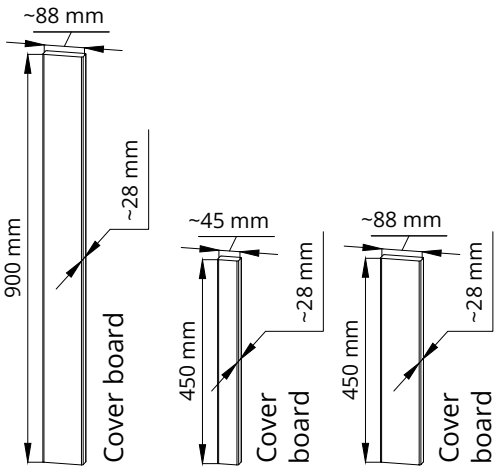

D3
x 2

D4
x 8

D5
x 2

K Square woods 45x45mm

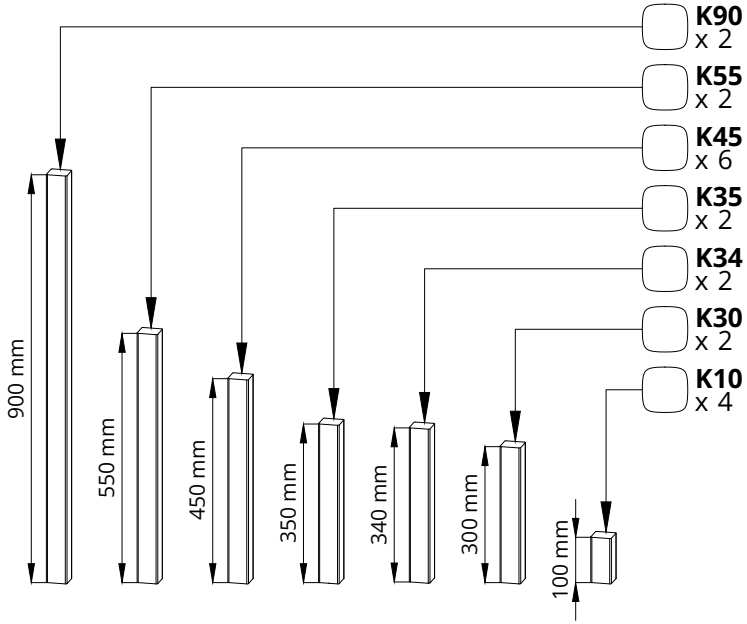

K90
x 2

K55
x 2

K45
x 6

K35
x 2

K34
x 2

K30
x 2

K10
x 4

Detail list 3

Nails and screws (Scale 1:2)	Area of use	Name in in. manual	Screw size	Quantity	
	Mainly for construction inside and outside	S7	Screws 4,5x80 for Spruce	x200	☐
			Screws 4,2x75 for Thermo		
	For fixing the door(s)	S6	Screws 4,2x75	x25	☐
	Mainly for construction inside and outside	S5	Screws 4,5x60 for Spruce	x200	☐
			Screws 4,2x55 for Thermo		
	Not in use in this sauna Only for the window(s)	S4	Screws 4,2x55	x0	☐
	For fixing front door moldings (the package screws is attached to the door moldings)	S3.2	Screws 4,5x50	x14	☐
	Not in use in this sauna Only for the window moldings	S3.1	Screws 3x40	x0	☐
	Mainly for construction inside and outside	S2	Screws 3x40	x15	☐
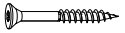	Mainly for construction inside and outside	S1	Screws 3x30	x18	☐
	during roof installation	R5	Nail 2,5x20	1kg	☐

Detail list 4

S7	Screws 4,5x80 for Spruce Screws 4,2x75 for Thermo	x6

NB! use a level

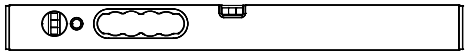

The base of the sauna must be level!

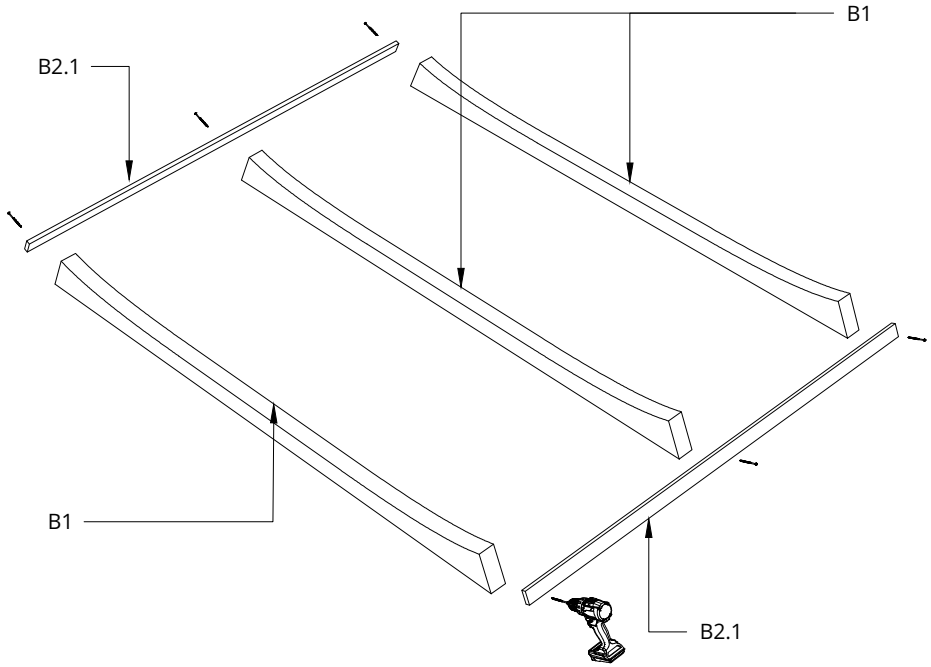

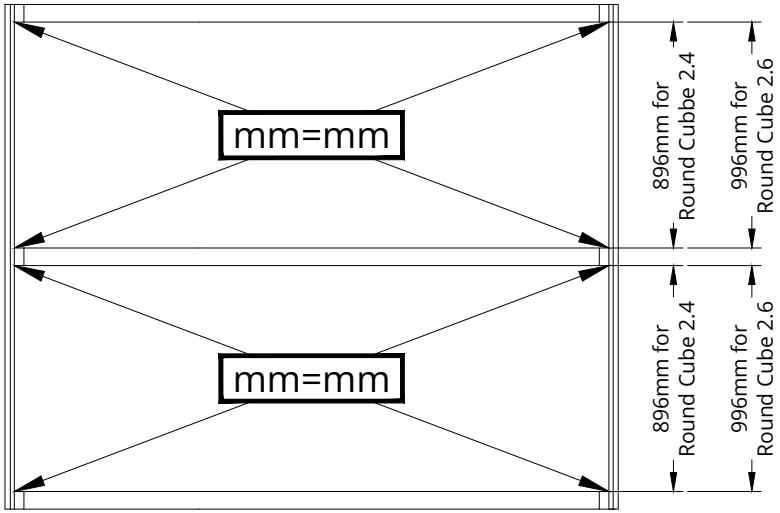

S7	Screws 4,5x80 for Spruce Screws 4,2x75 for Thermo	x6

Use two screws for point A1, A2 and A3
(see sketch)

Please countersink the screw head!

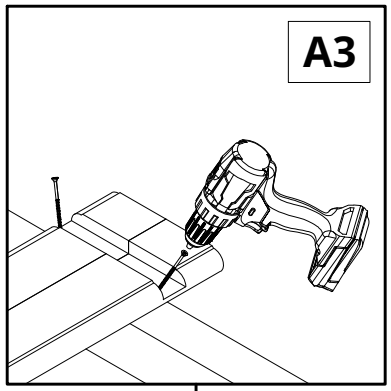

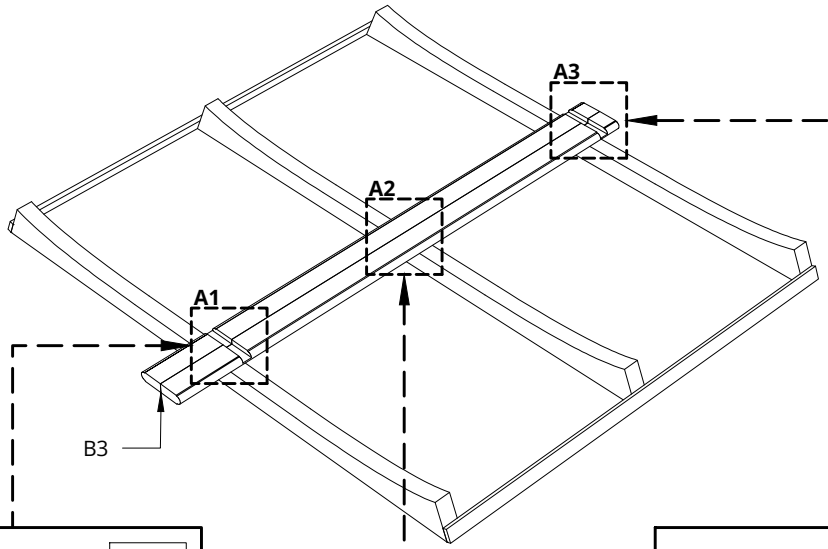

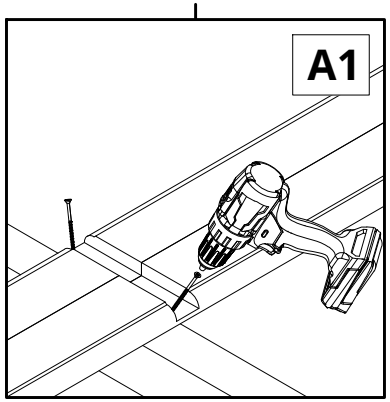

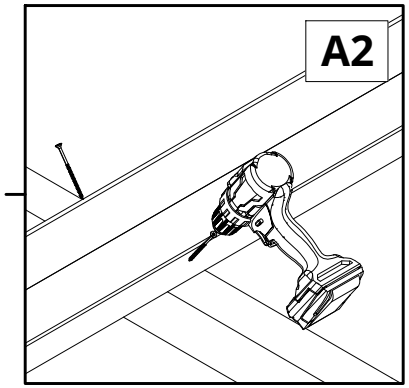

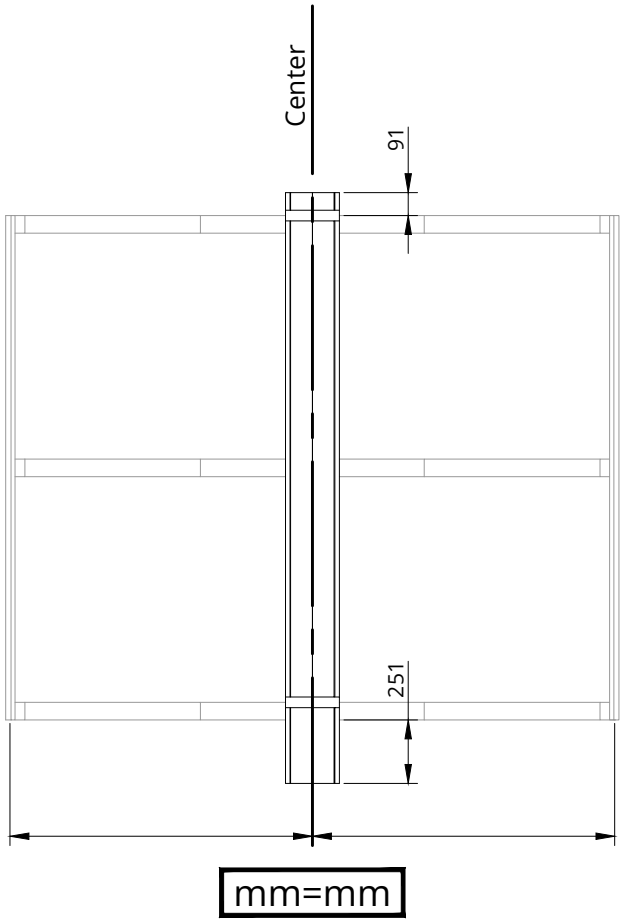

S7	Screws 4,5x80 for Spruce Screws 4,2x75 for Thermo	x60

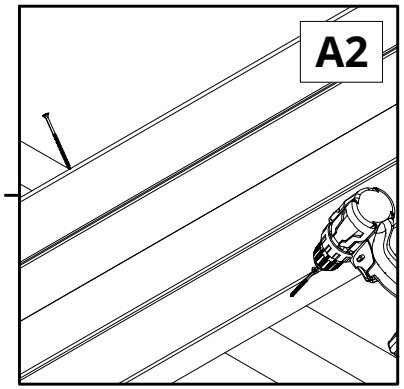

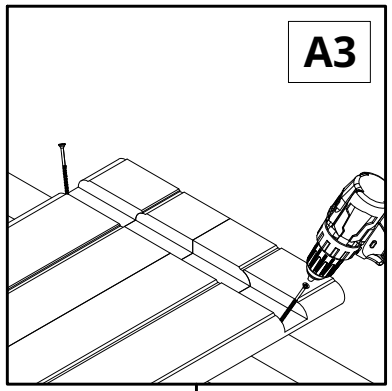

Use a rubber mallet to tap the planks together.

Screw each plank B3a and B3b to the foundation B1 with a screw. ~10 pieces on each side left B3a and right B3b.

Please countersink the screw head!

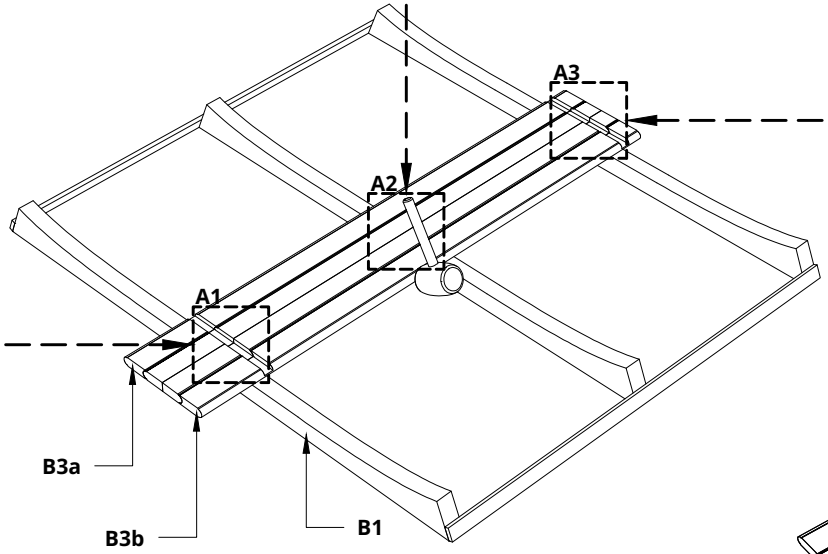

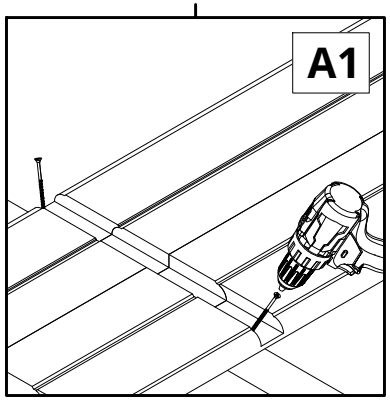

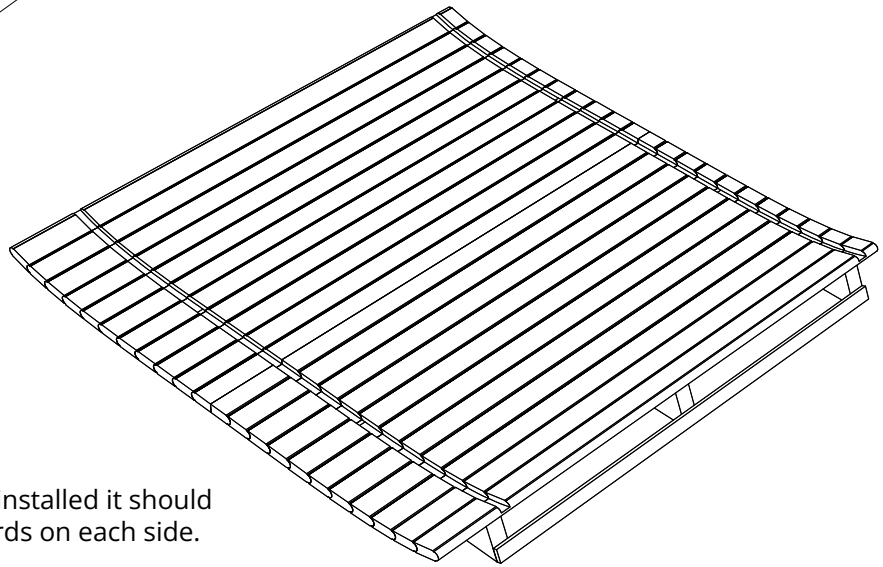

When the boards are installed it should look like this, ~10 boards on each side.

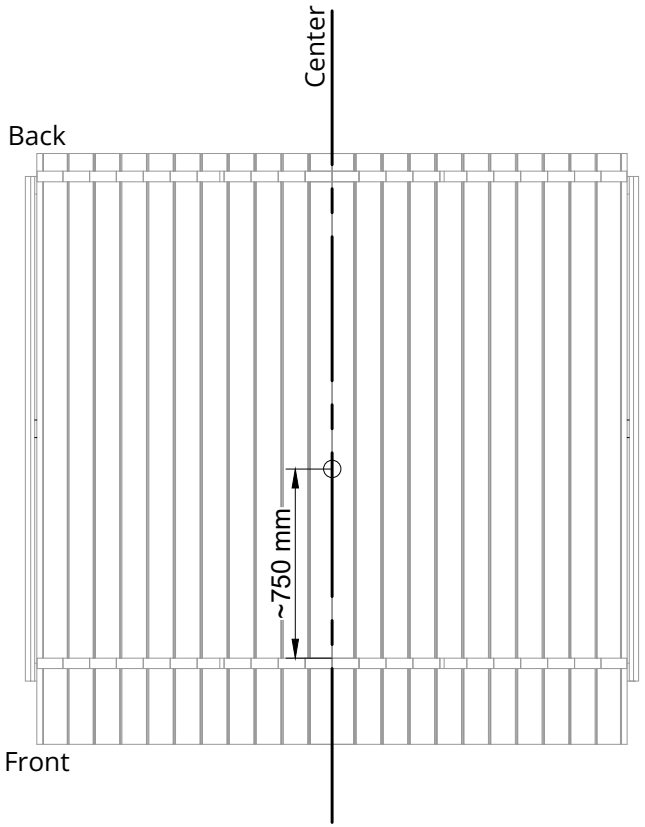

Before installation of the drain pipe,
hole must be cut with a hole saws.

Install a piece of drain pipe V1.

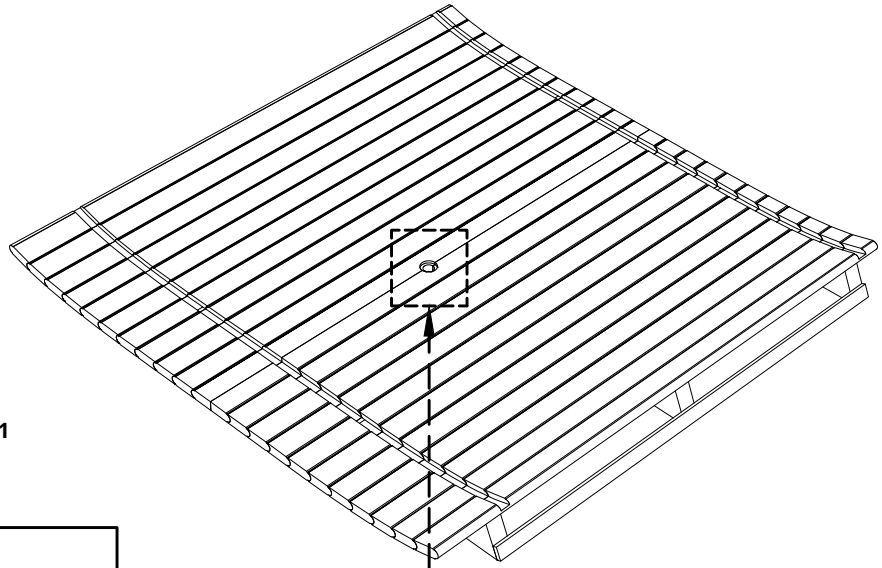

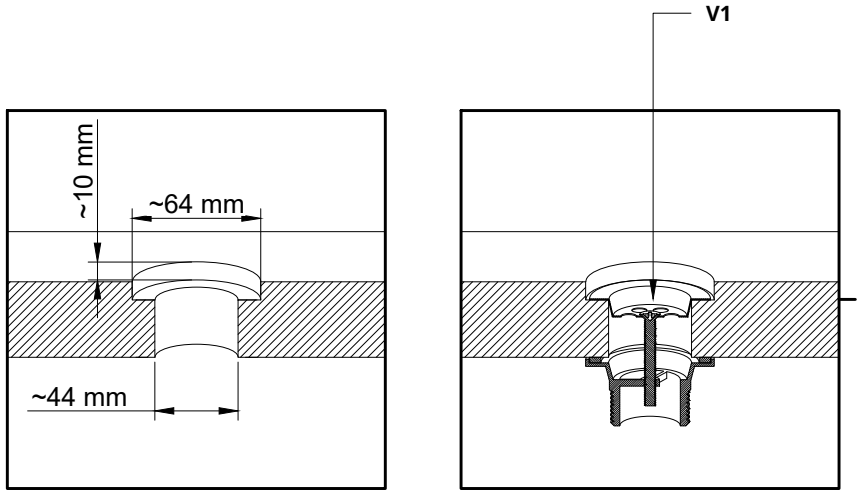

Lay R1 (rubber seal) to the inside of the groove as shown in picture A3 and A4.

Drill 10mm hole in each plank, in the front wall groove and in the rear wall groove to the out-side as shown in the picture A1and A2.

Remove the connecting beam B2.1 on both sides.

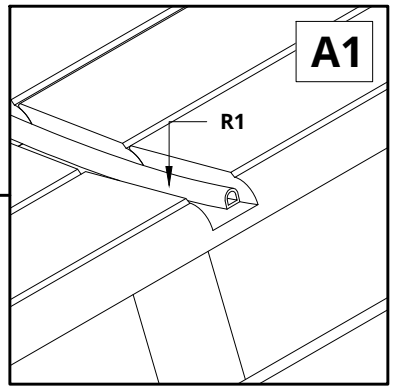

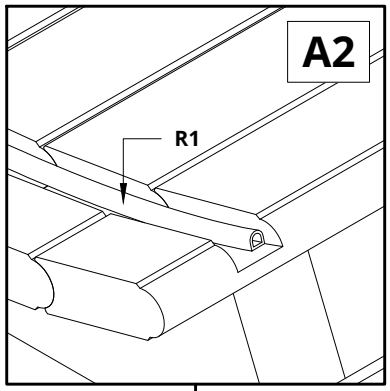

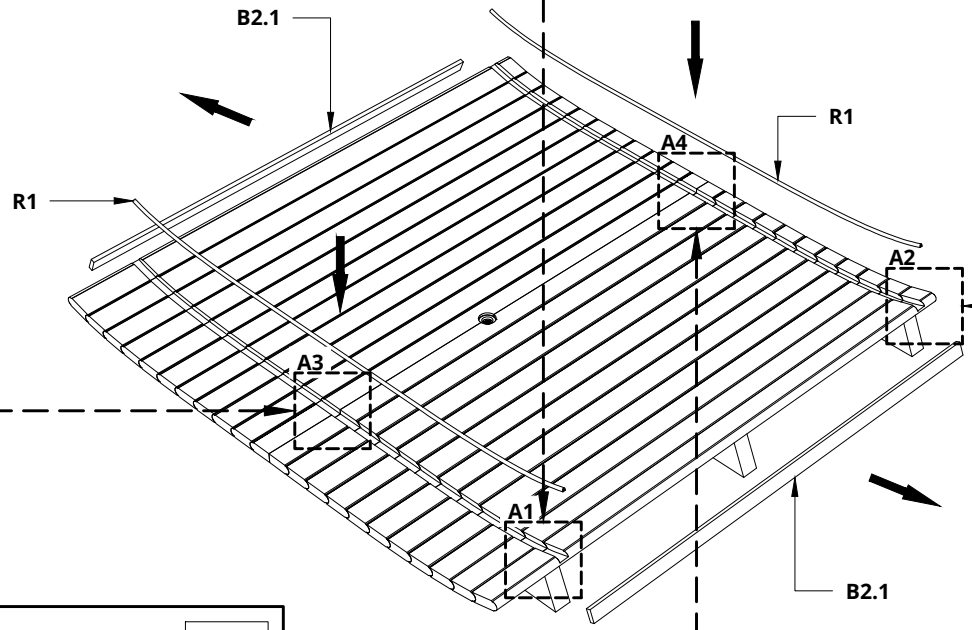

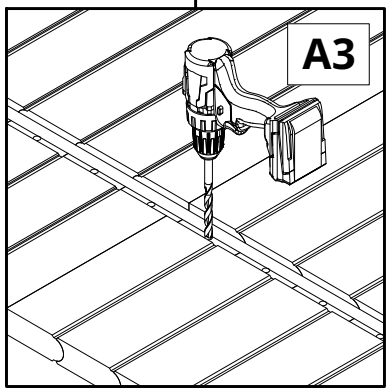

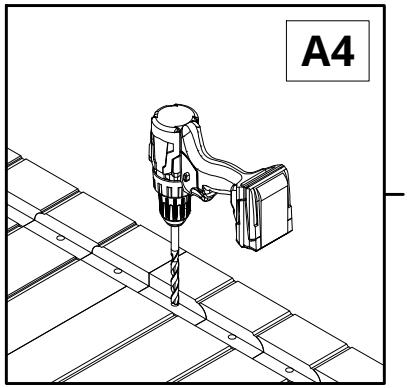

S7	Screws 4,5x80 for Spruce Screws 4,2x75 for Thermo	x8
S5	Screws 4,5x60 for Spruce Screws 4,2x55 for Thermo	x4

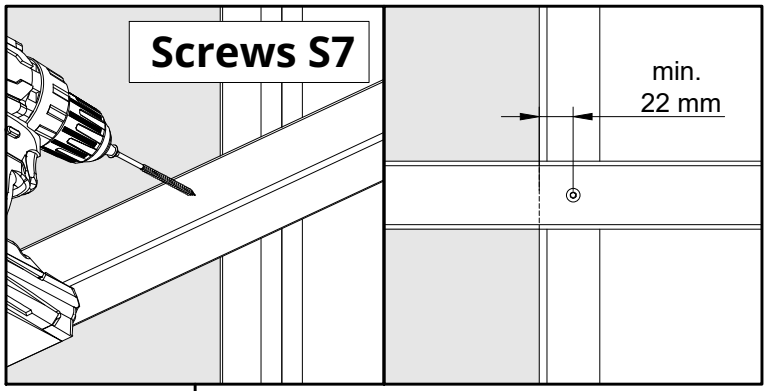

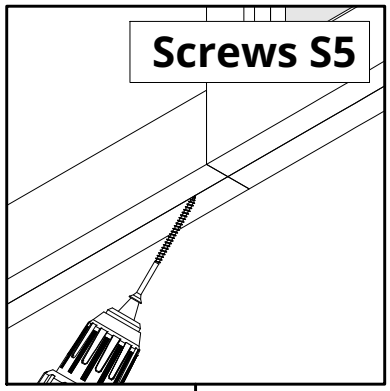

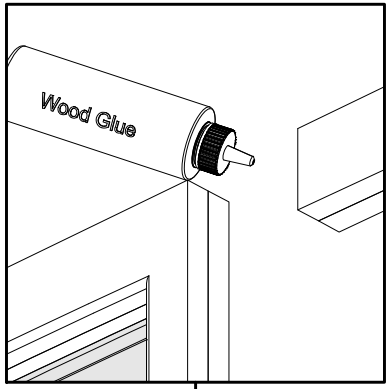

Preparation of the front wall.

When assembling the front wall, first use glue between the wall pieces and then screw the pieces together and add the wall reinforcements B2.2 to the inner side of the wall.

Let the glue dry according to the glue manufacturer's recommendations

Please countersink the S5 screw head!

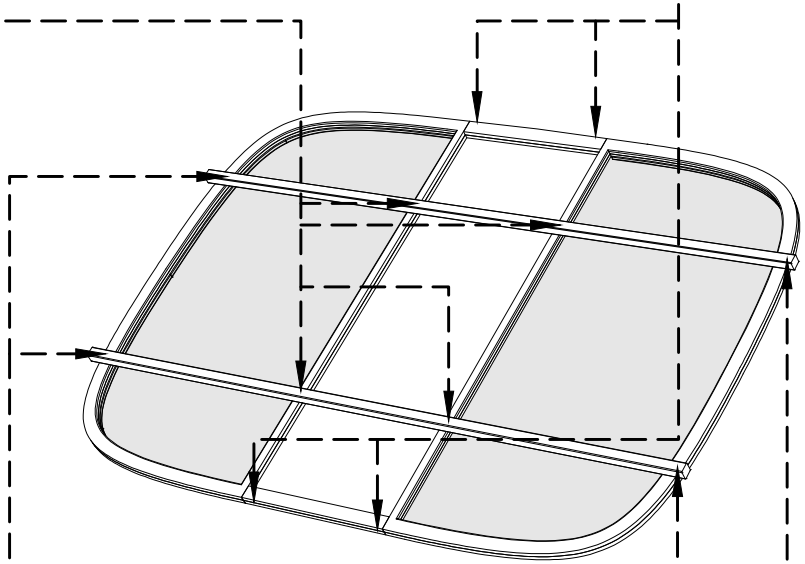

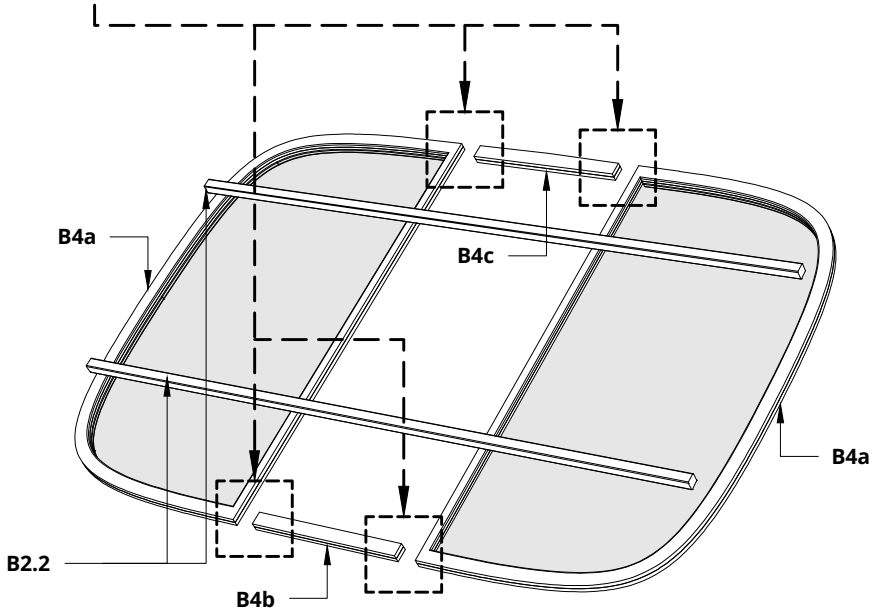

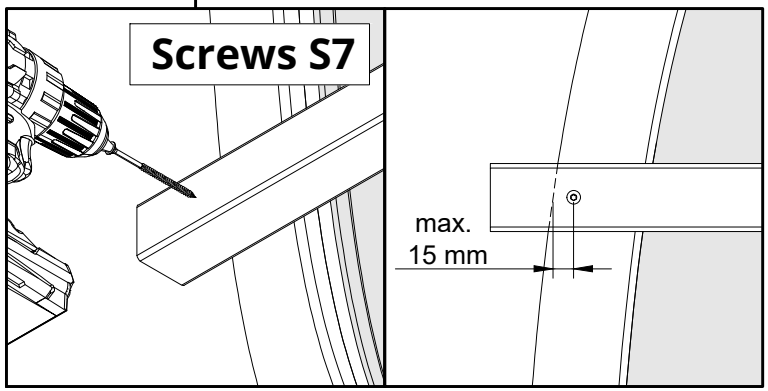

S5	Screws 4,5x60 for Spruce Screws 4,2x55 for Thermo	x2

NB! use a level

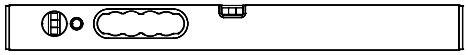

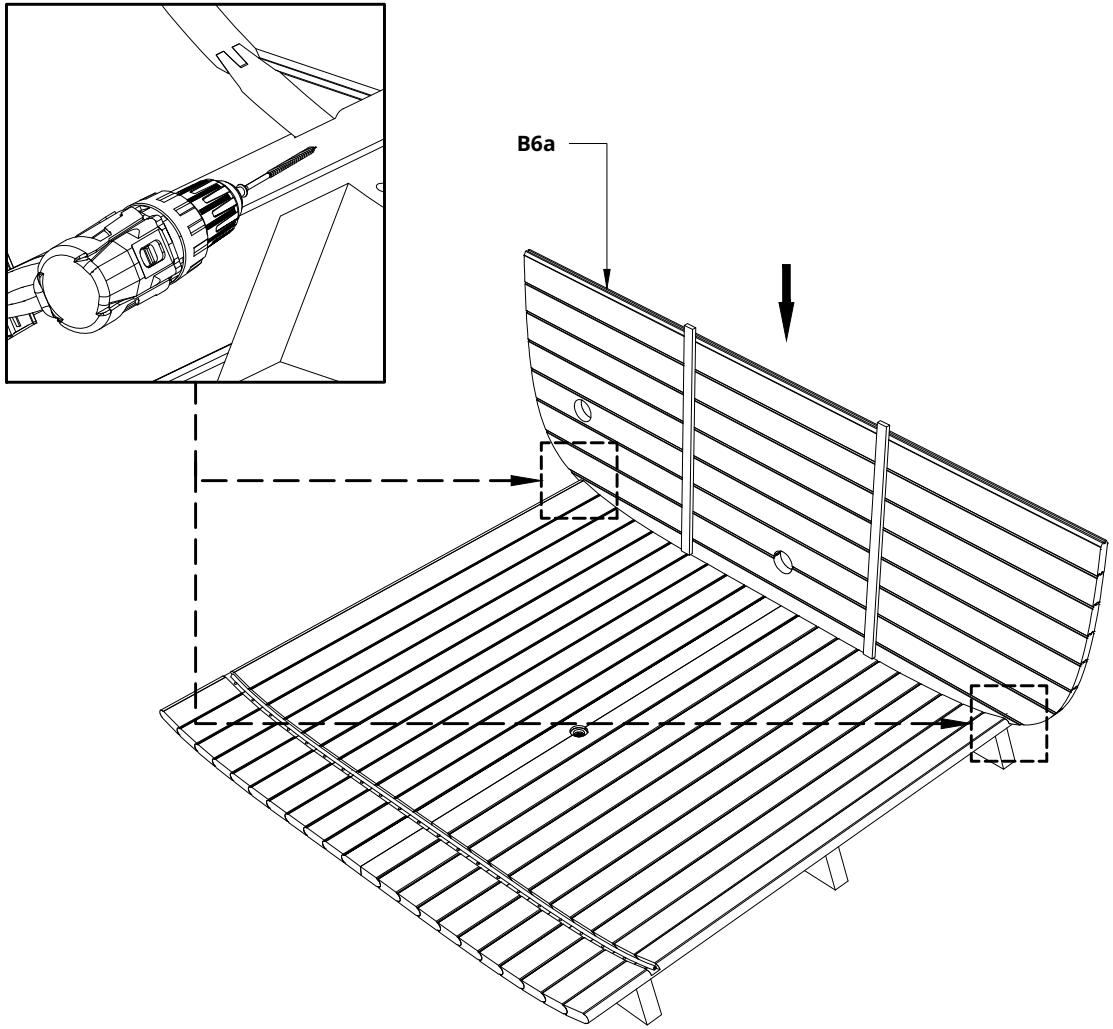

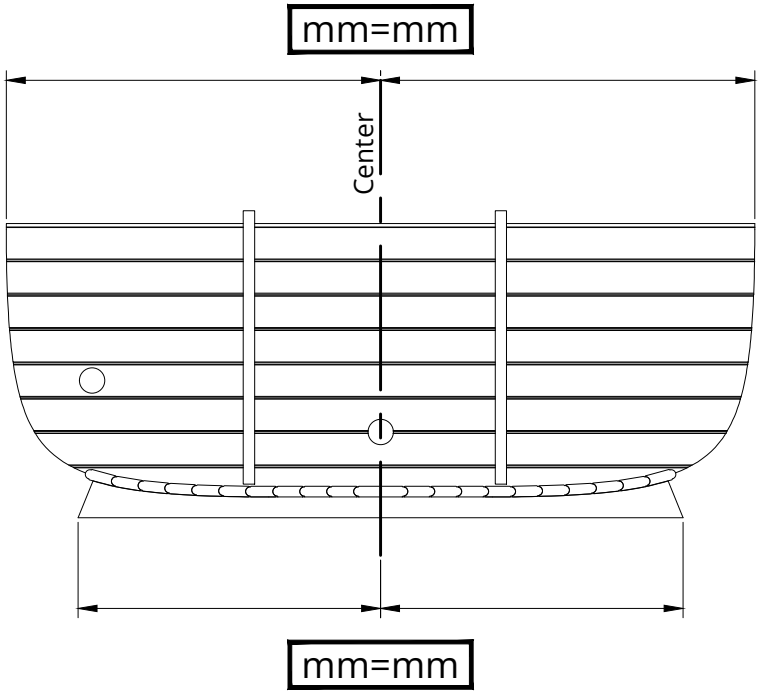

First install the lower part of the back wall. The lower part of the back wall must be in the center of the base.

If the lower part of the back wall is in place, then it must be fixed with screws. The screw locations are shown in the picture.

Please countersink the screw head!

S7	Screws 4,5x80 for Spruce Screws 4,2x75 for Thermo	x4
S5	Screws 4,5x60 for Spruce Screws 4,2x55 for Thermo	x2

NB! use a level

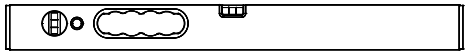

When installing the front wall, make sure that it stays in the Center!

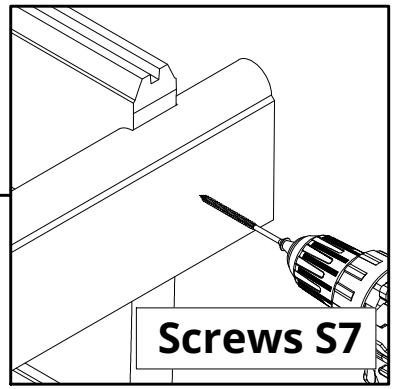

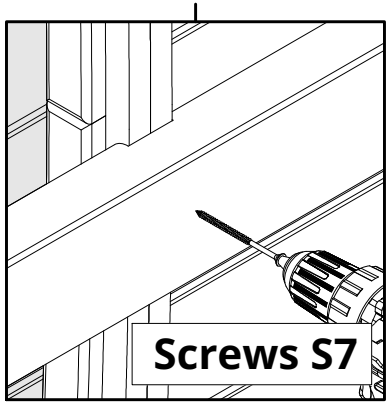

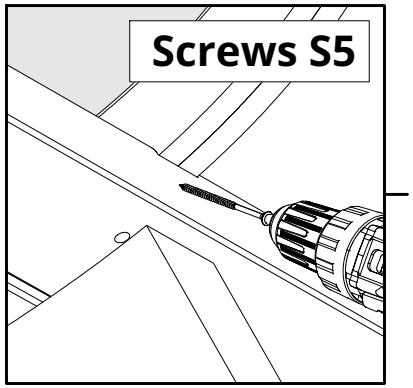

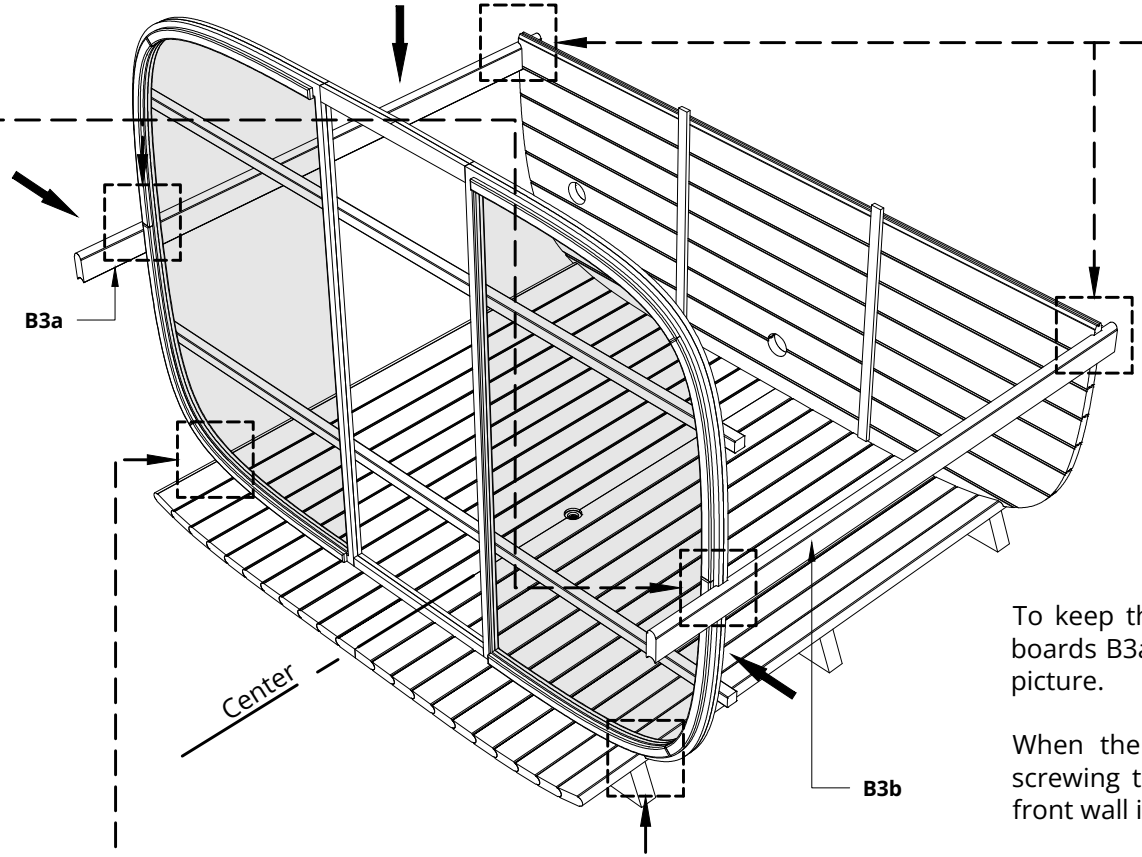

To keep the front wall upright, use the side wall boards B3a and B3b. install them as shown in the picture.

When the support boards are in place, before screwing the front wall to the base, check if the front wall is in the center.

Please countersink the S5 screw head!

S5	Screws 4,5x60 for Spruce Screws 4,2x55 for Thermo	x40

When the front wall is attached, start building the side walls on the left B3a and on the right B3b. Use a rubber mallet to tap the boards into place and then fasten with screws.

Build the side walls to the upper edge of the lower part of the back wall as shown in the picture.

Please countersink the S5 screw head!

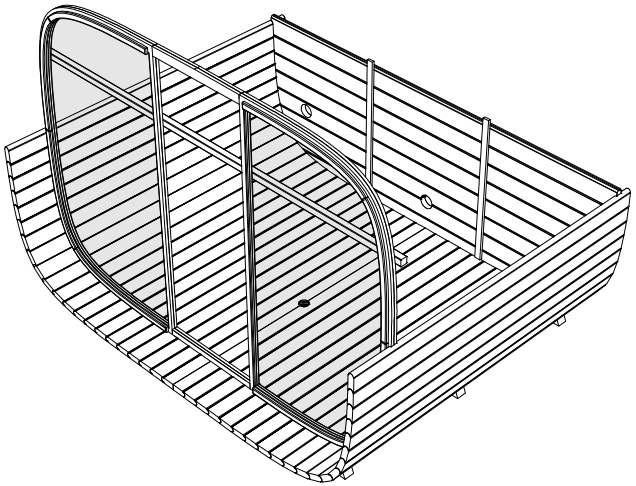

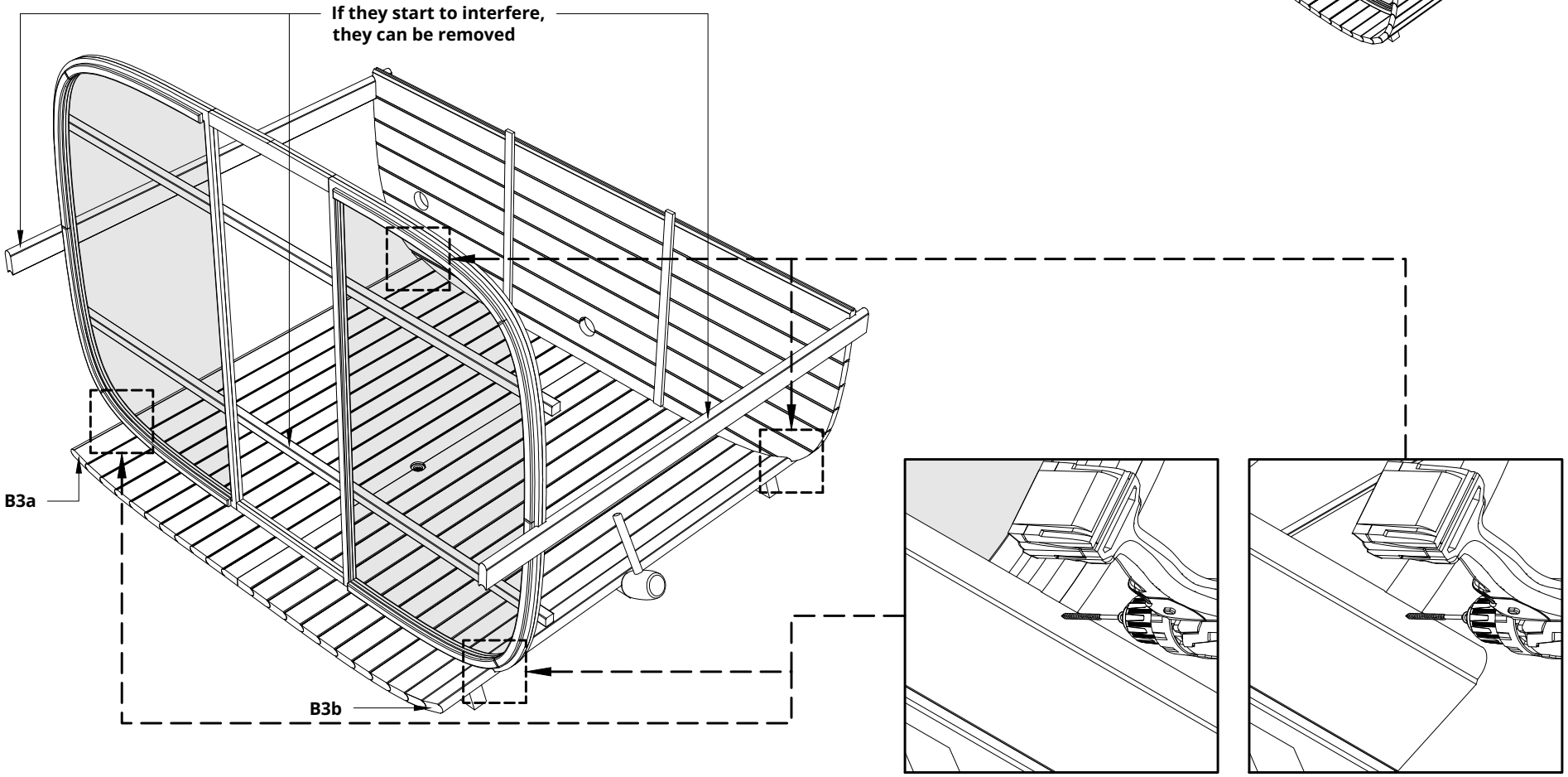

S7	Screws 4,5x60 for Spruce Screws 4,2x55 for Thermo	x2

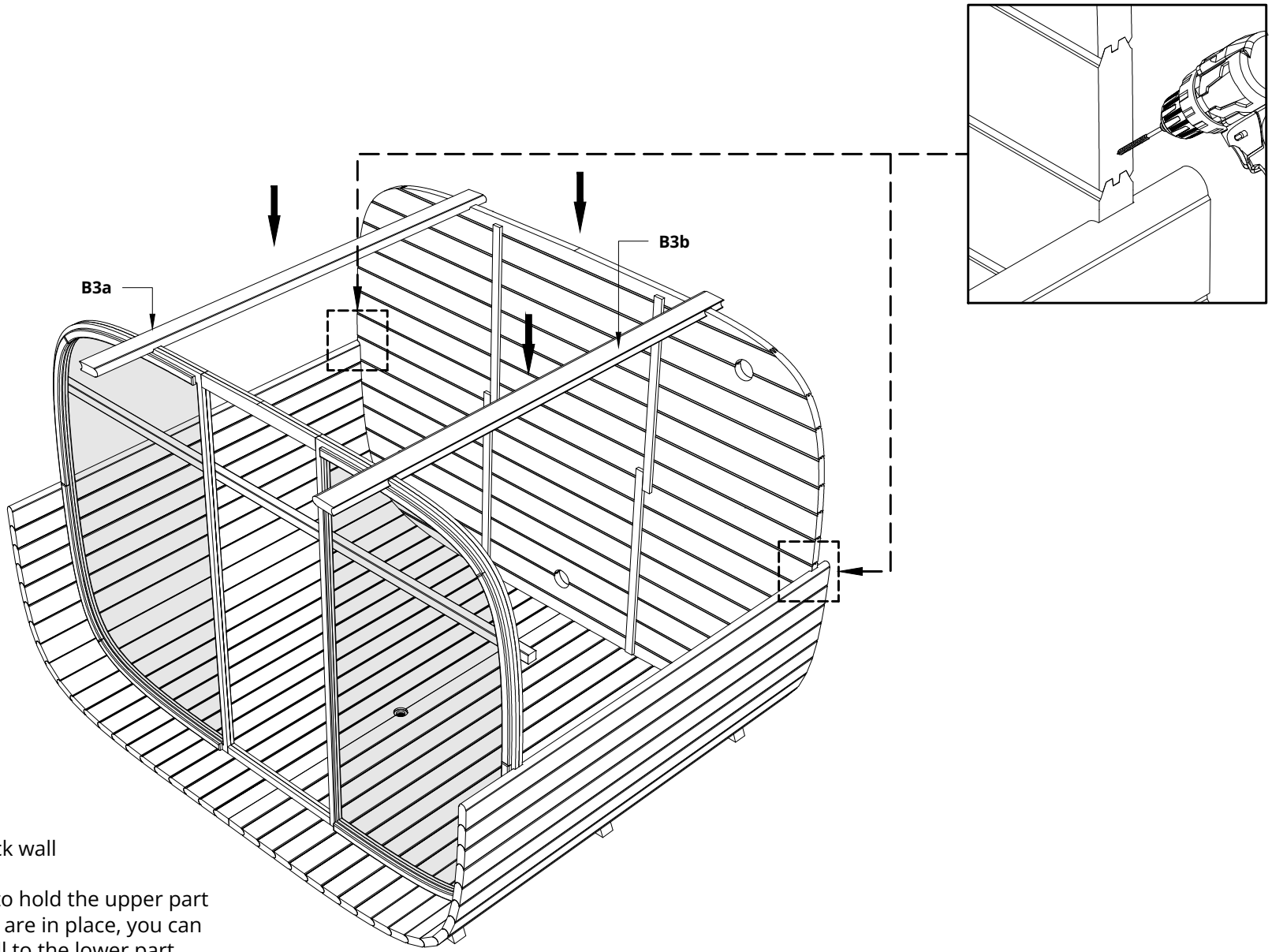

Now install the upper part of the back wall

Install support boards B3a and B3b to hold the upper part of the back wall securely. When they are in place, you can screw the upper part of the back wall to the lower part.

Please countersink the screw head!

S5	Screws 4,5x60 for Spruce Screws 4,2x55 for Thermo	x84

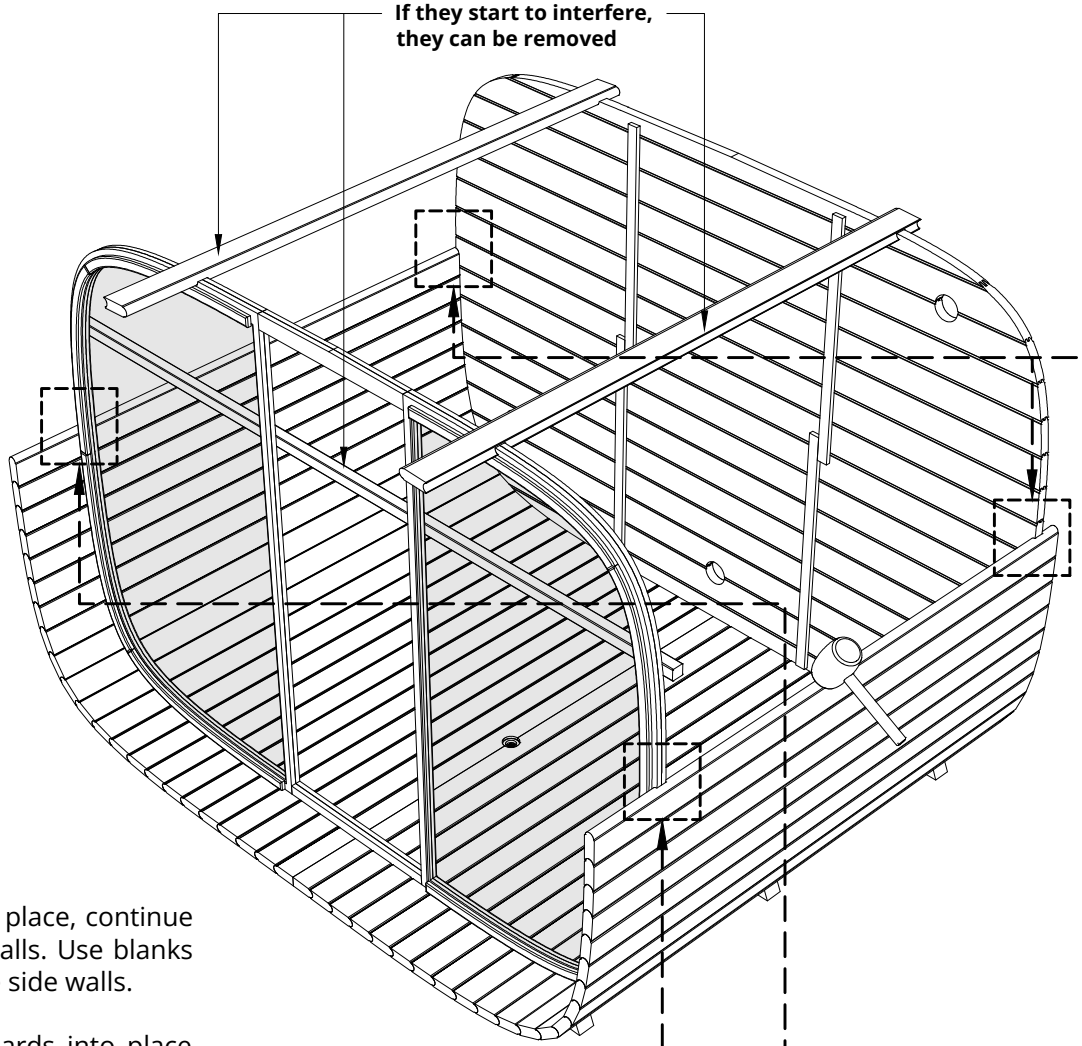

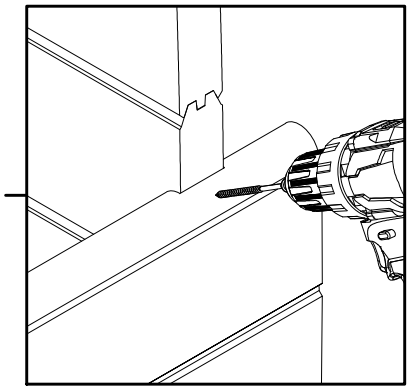

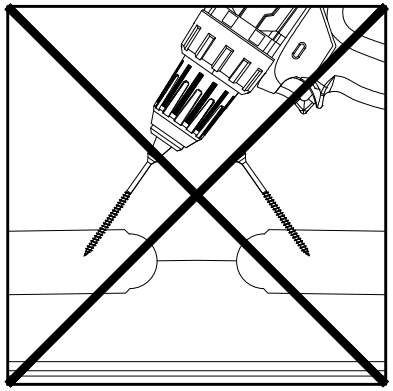

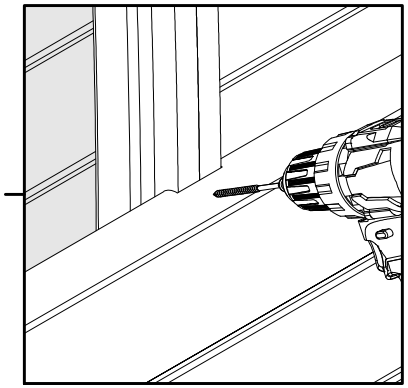

When the top of the back wall is in place, continue with the construction of the side walls. Use blanks B3a (left) and B3b (right) to build the side walls.

Use a rubber mallet to tap the boards into place and then fasten with screws.

Please countersink the screw head!
Please do not screw the screws in on the last whole blanks immediately.

Please measure the gap front and back,
the dimensions can be different.

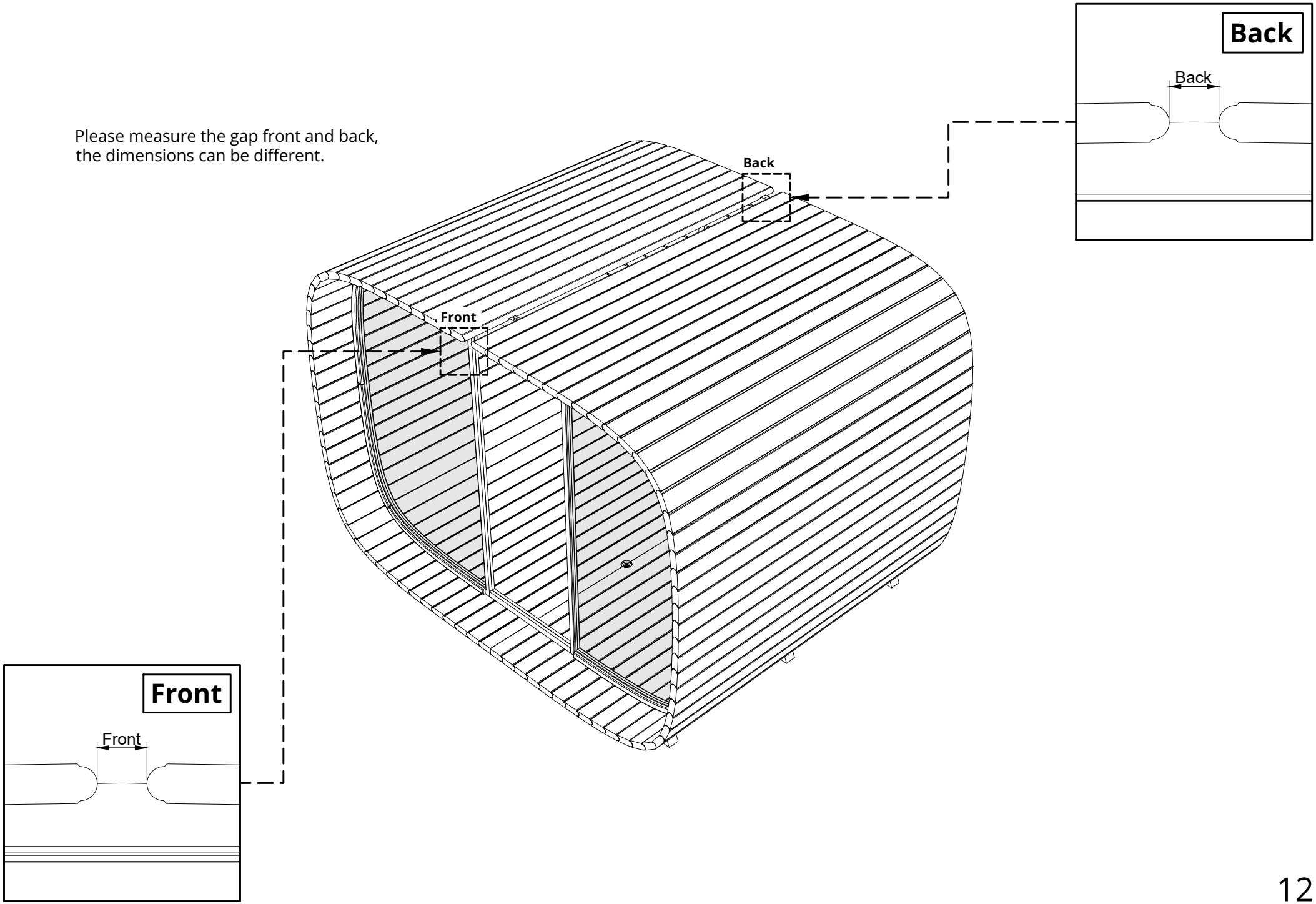

S2...7	Screws 3x40 ... 4,5x80	x7

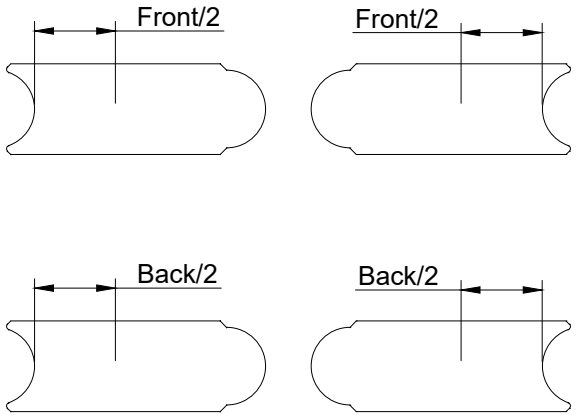

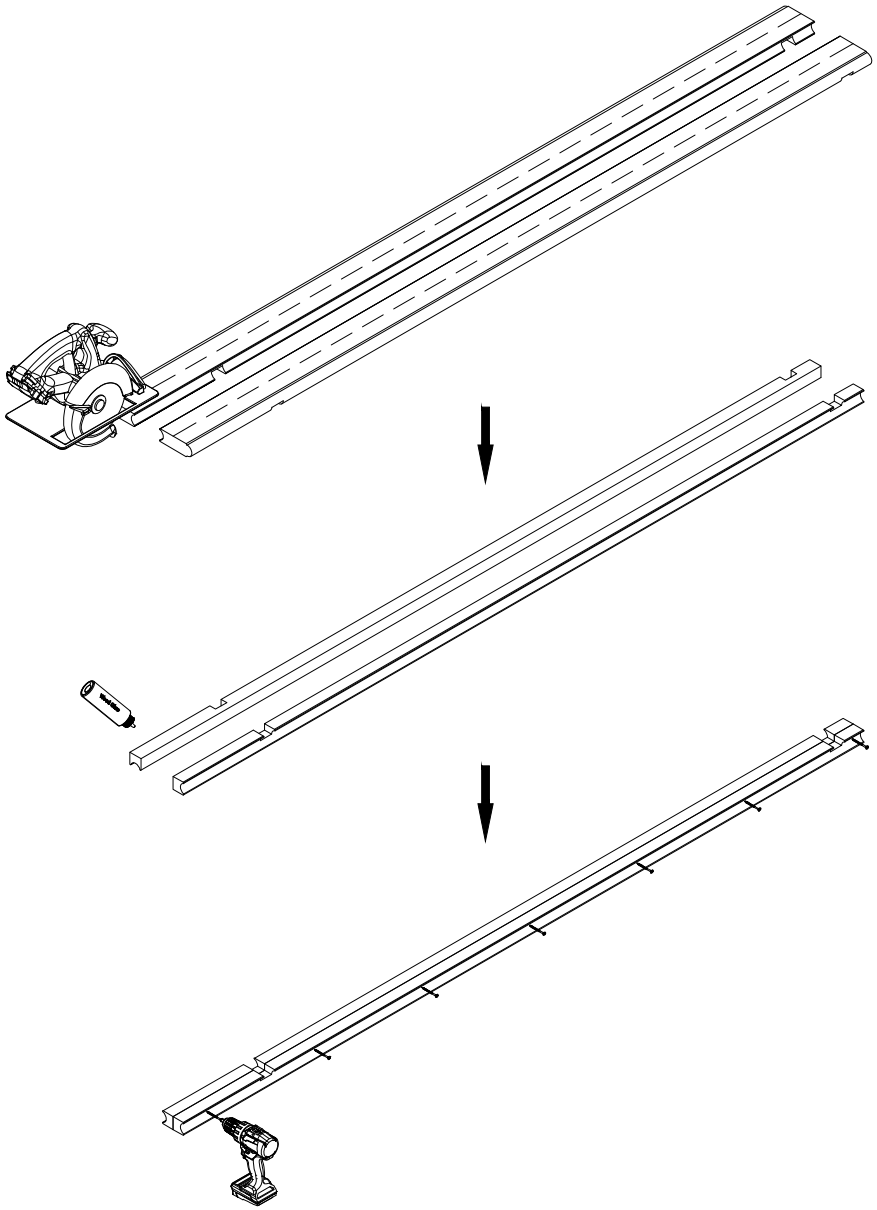

Divide the measurement by two and transfer the measurements to the last two planks. Connect the dimensions on the plank with a line and cut off these ends.

Glue the two freshly cut boards with wood glue and connect them with 7 pieces of 3x40 ... 4.5x80 screws (the length of the screws depends on the final width of the last two planks cut). Wipe off excess glue with a cloth and then use sandpaper to smooth out the gap.

Please countersink the screw head!

S5	Screws 4,5x60 for Spruce Screws 4,2x55 for Thermo	x6

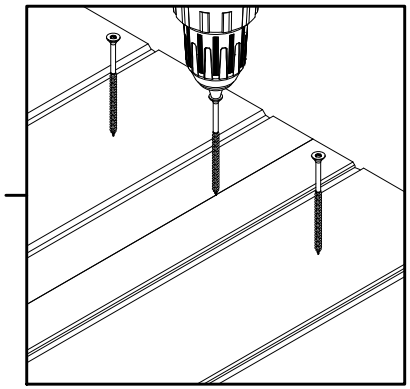

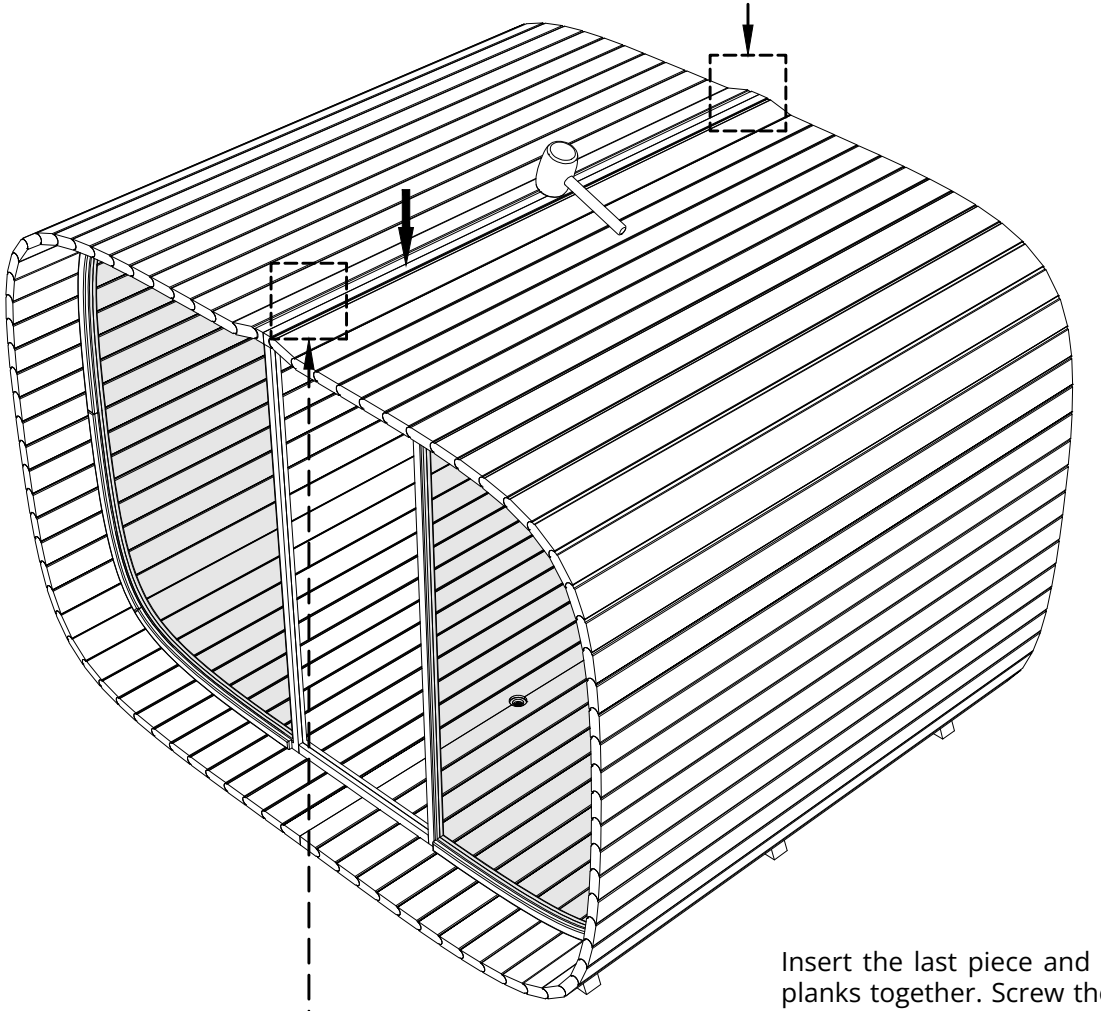

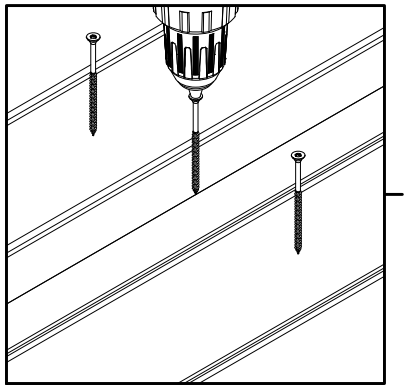

Insert the last piece and use a rubber mallet to tap the planks together. Screw the loose planks to the walls with screws

Please countersink the screw head!

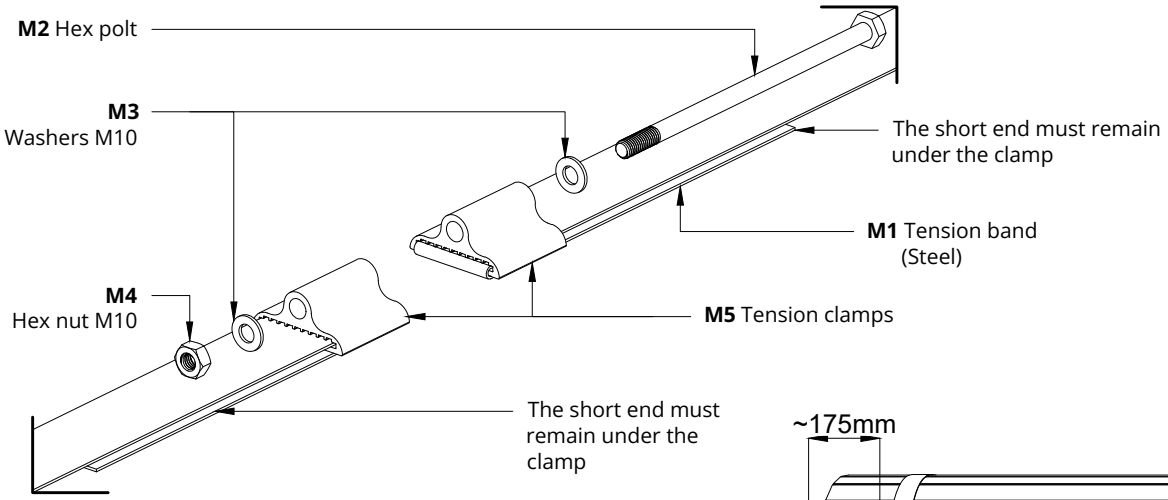

Place the tensioning bands M1 (Steel band) around the side walls and thread the bands into the eyelet as follows (see sketch above).

Hex nuts and bolts must be tightened as long as the planks are stationary in all directions.

The tension band and clamps must be placed as shown in the picture below.

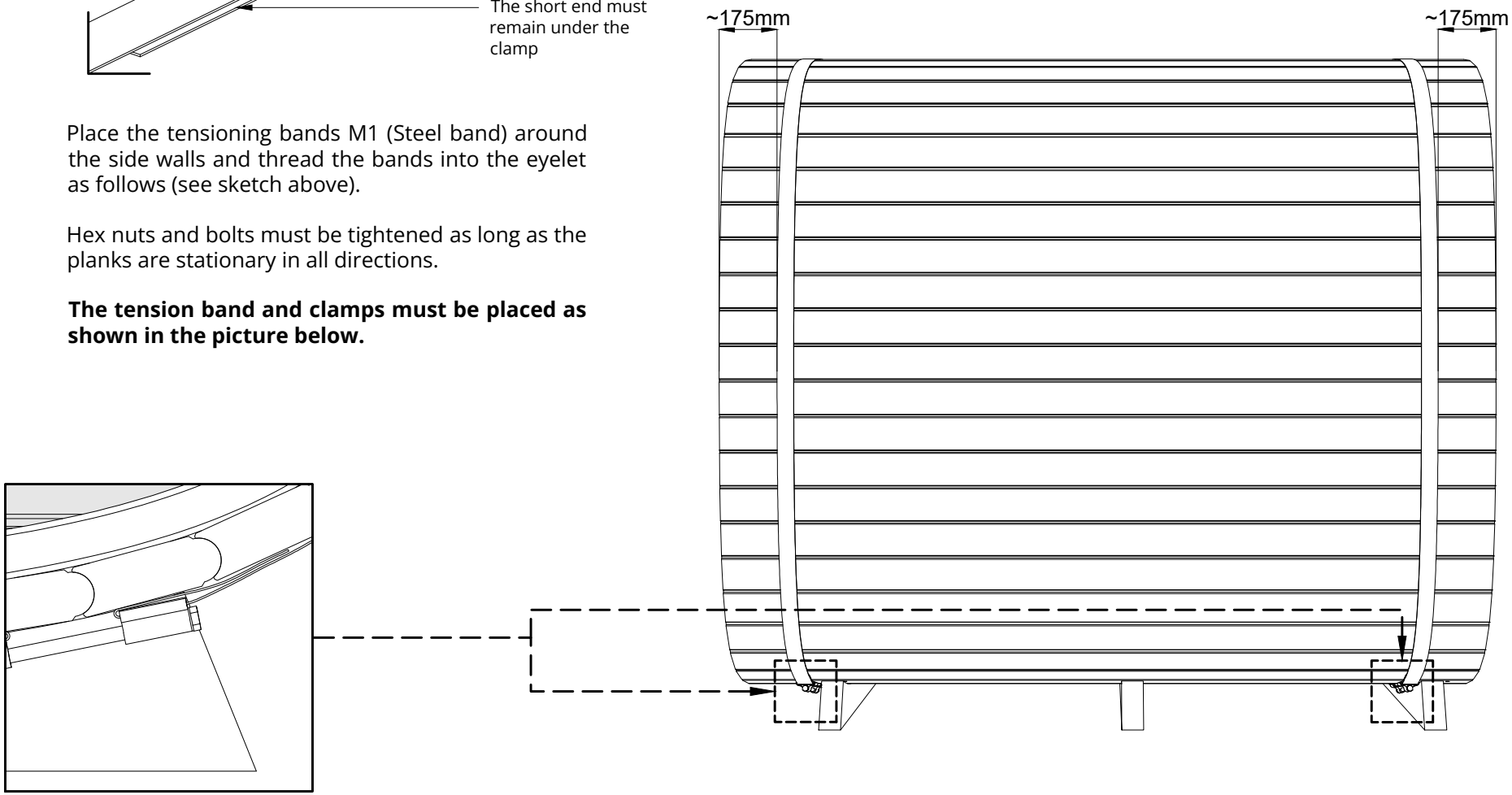

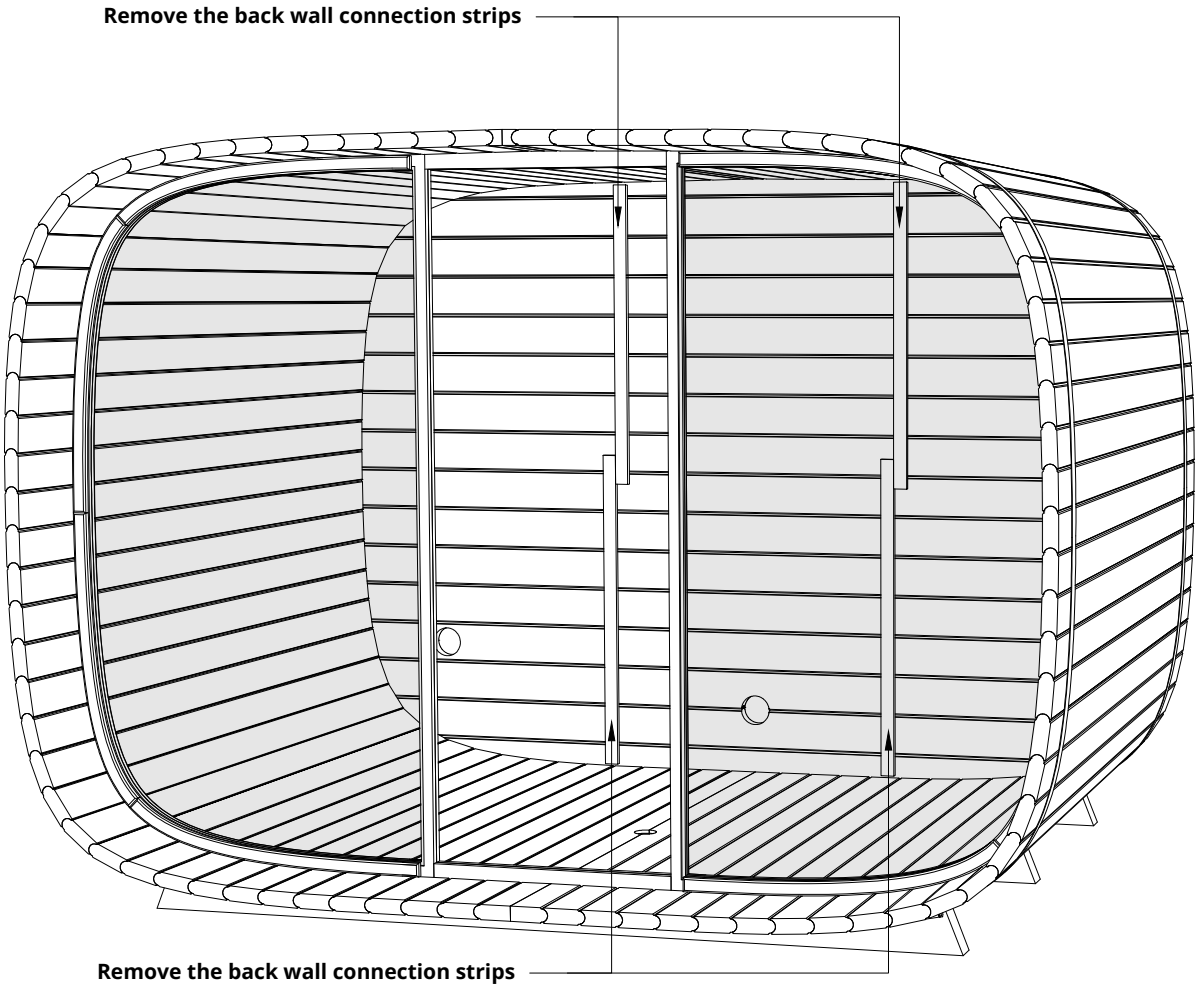
Remove the back wall connection strips
Remove the back wall connection strips

S1	Screws 3x30	x18

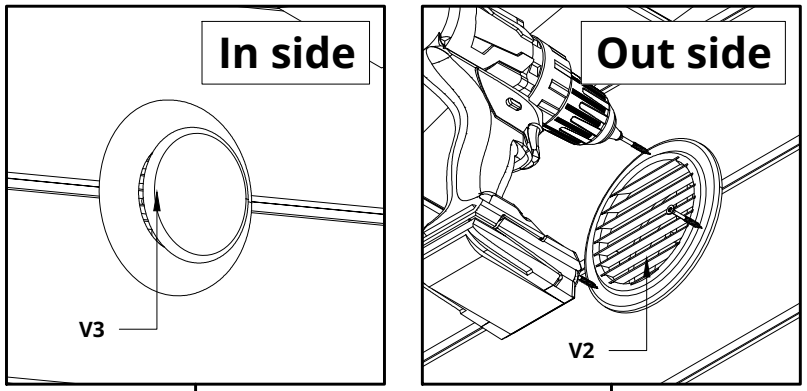

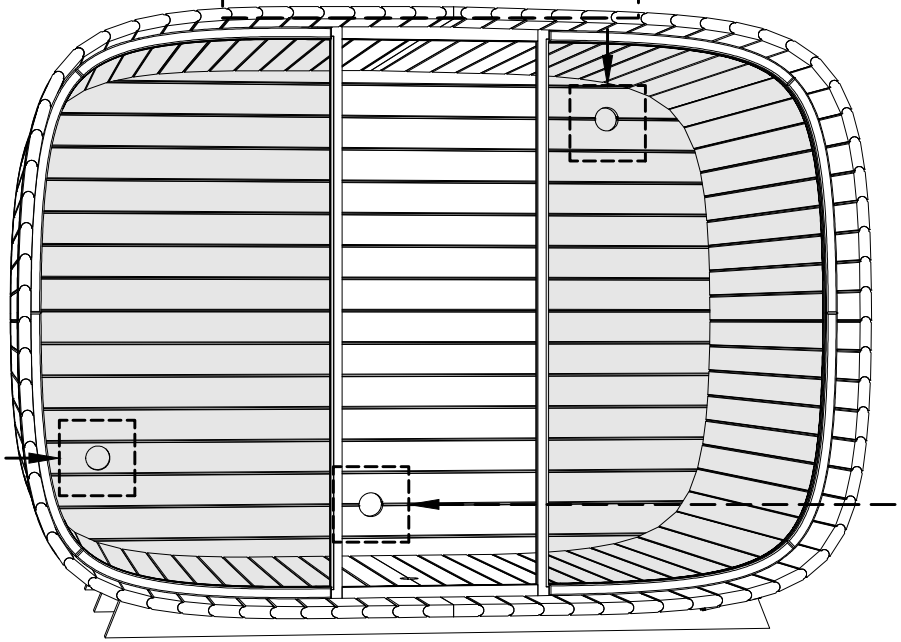

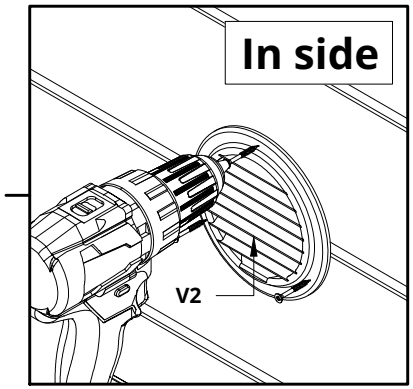

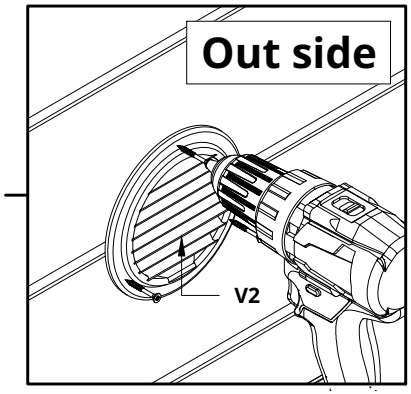

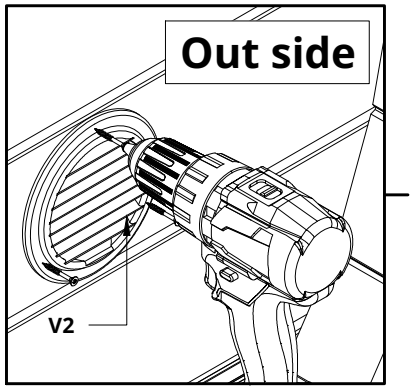

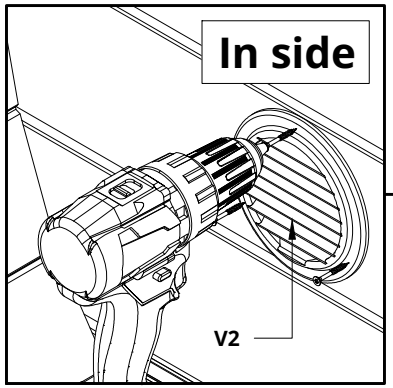

The inner and outer ventilation grilles V2 and adjustable cover V3 are screwed with 3 screws

S6	Screws 4,2x75	x14
S3.2	Screws 4,5x50	x14

NB! use a level

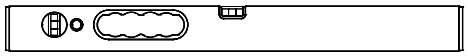

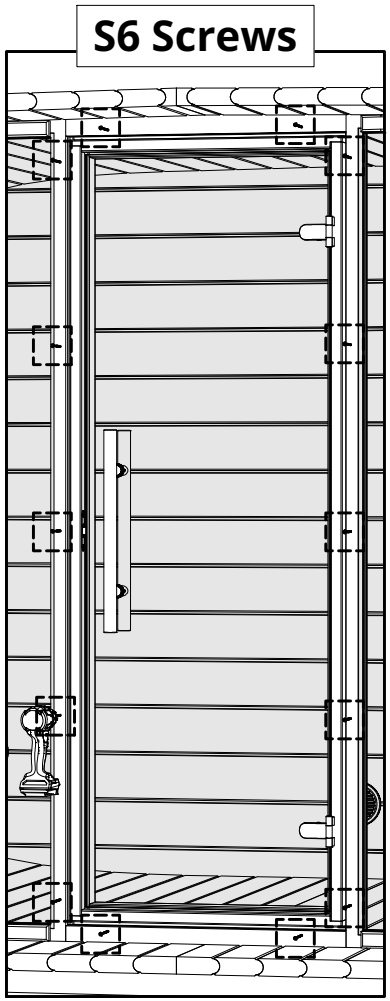

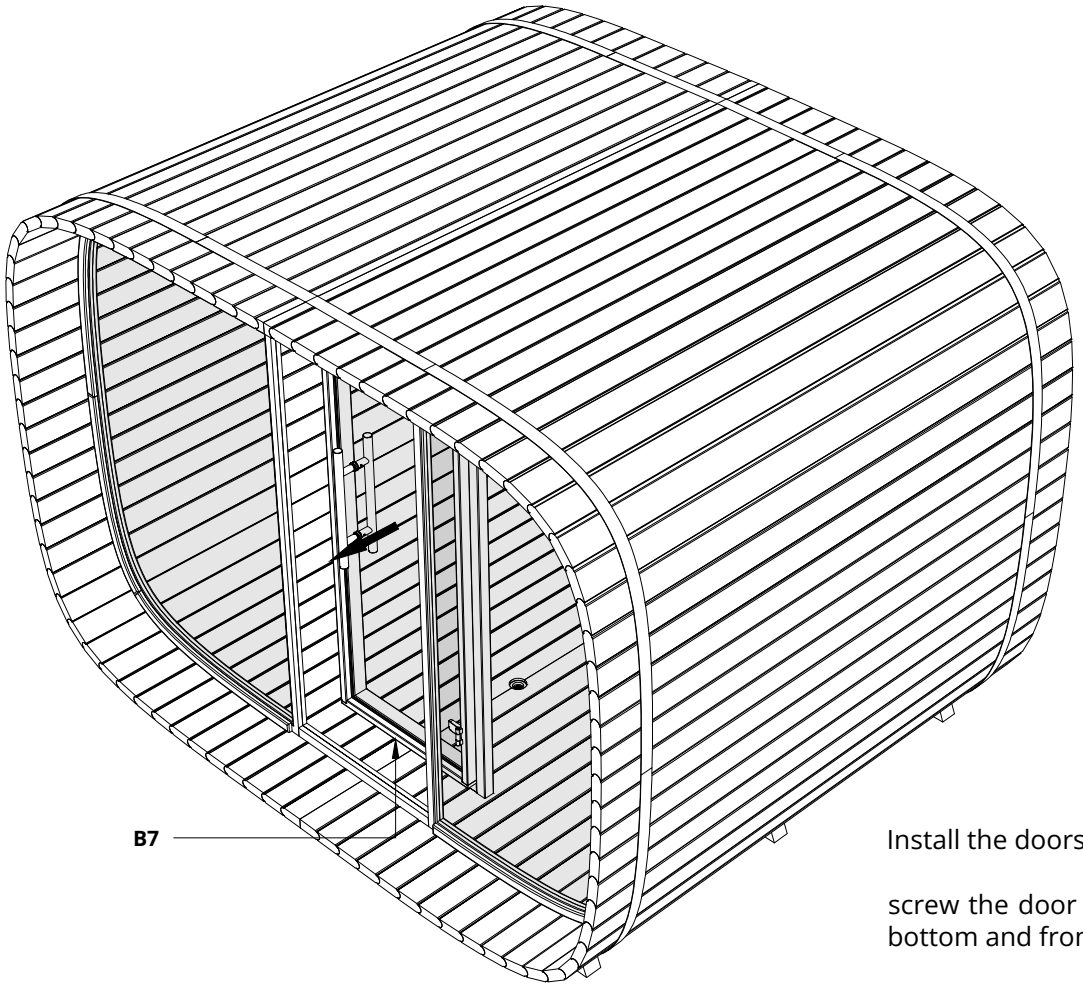

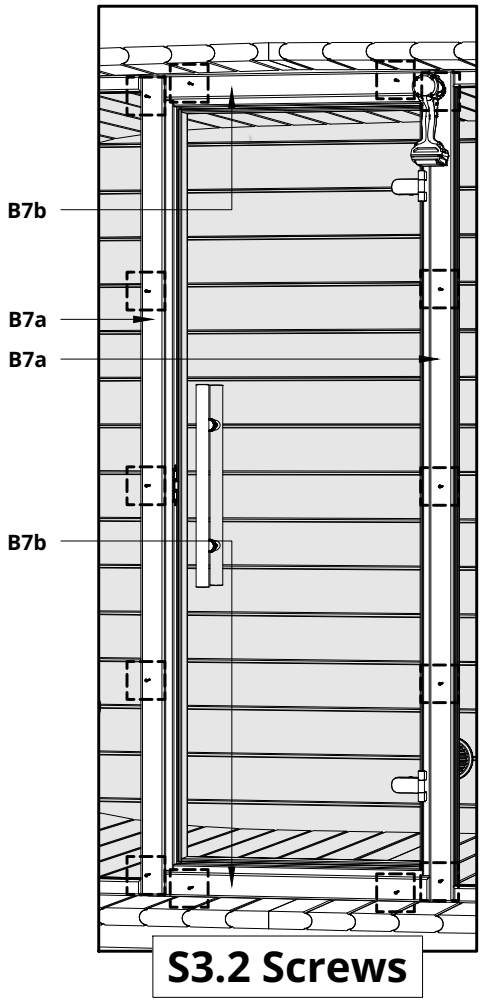

Install the doors from inside. (shown in the picture).

screw the door from the sides with 5 screws from the bottom and from the top with 2 screws

if the door is in place, install the door moldings top 2 screws and bottom 2 screws and the sides with 5 screws.

Please countersink the screw head!

R5	Nail 2,5x25

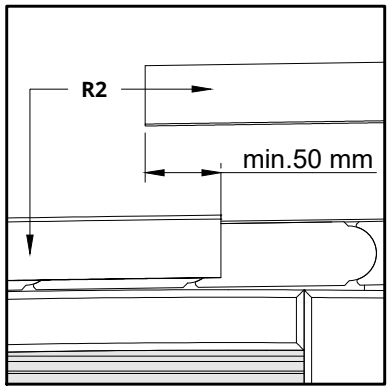

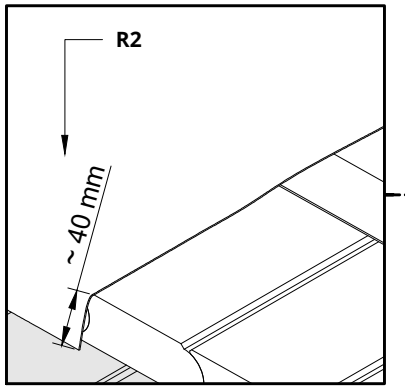

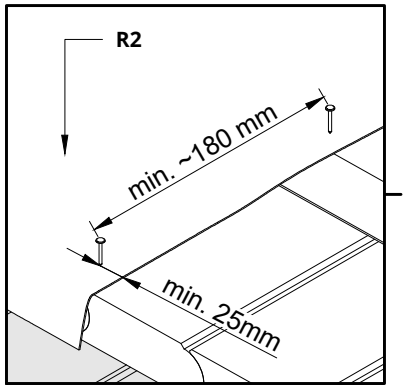

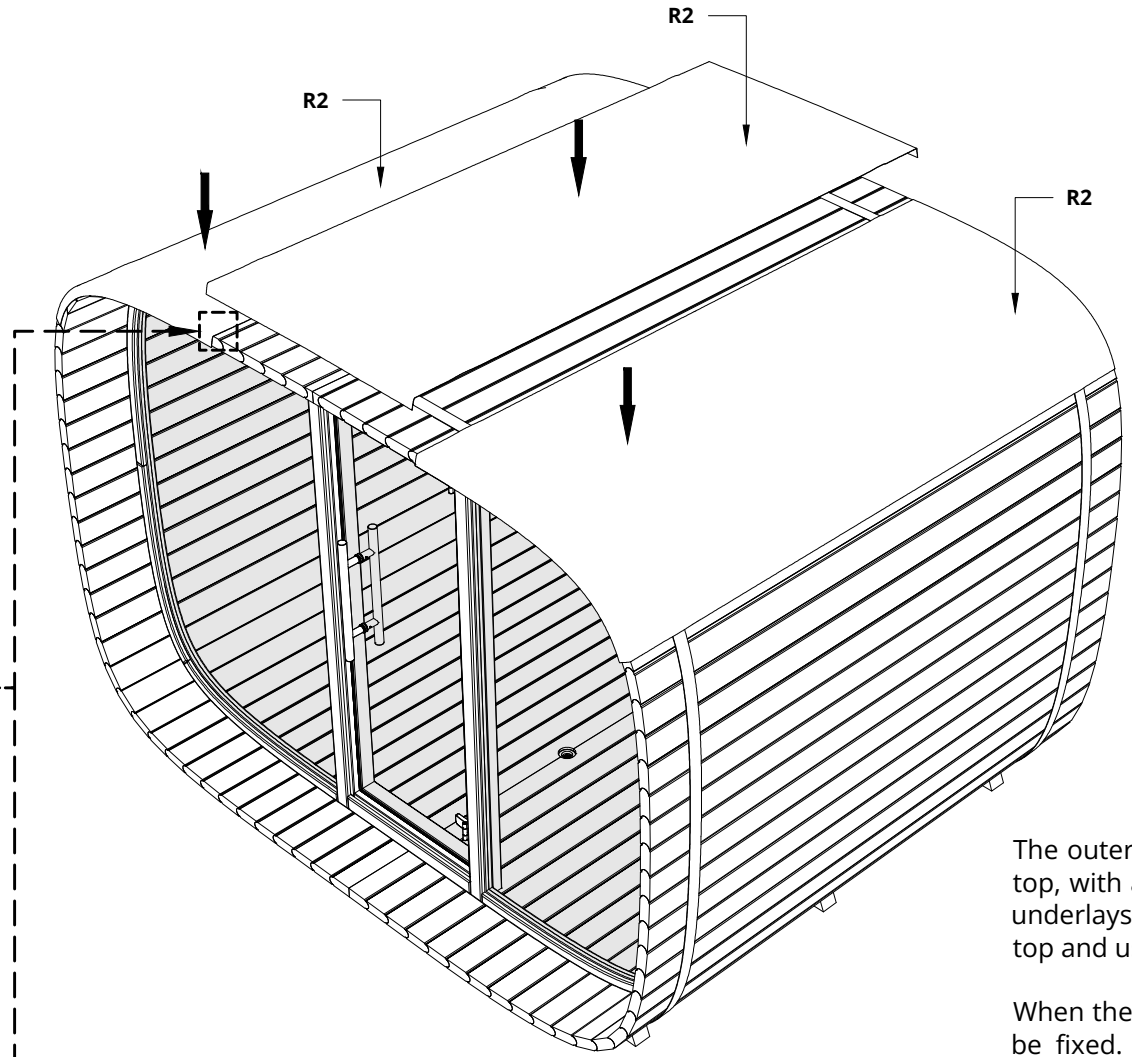

Install first outer underlayment install so that the middle underlay overlaps the outer ones by at least 50 mm to cover te nail heads.

The underlay must extend over the front end and back end at least by 40 mm.

The outer underlays are fixed with nails from the top, with a gap of about 180mm. When the outer underlays are in place, put the middle unterlay on top and use a heat source to make it stick.

When the underlays are in place, their ends must be fixed. They must be bent before fixing with nails.

Use a heat source when you bend them, otherwise they may break or leave cracks.

R5	Nail 2,5x25

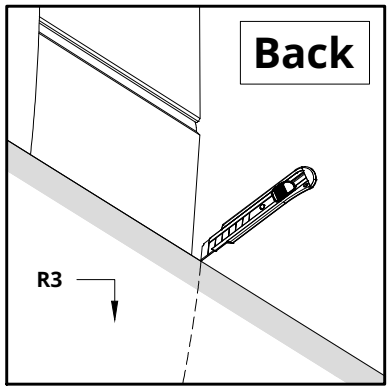

The base sheet of the first row must be installed first.

Sheets are self-adhesive for better adhesion use a heat source.

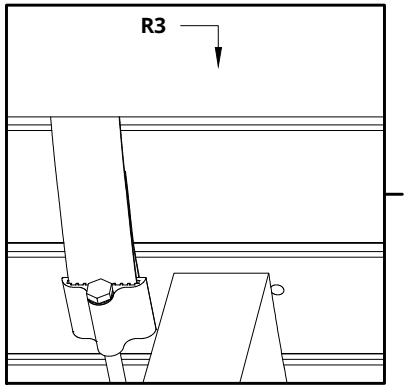

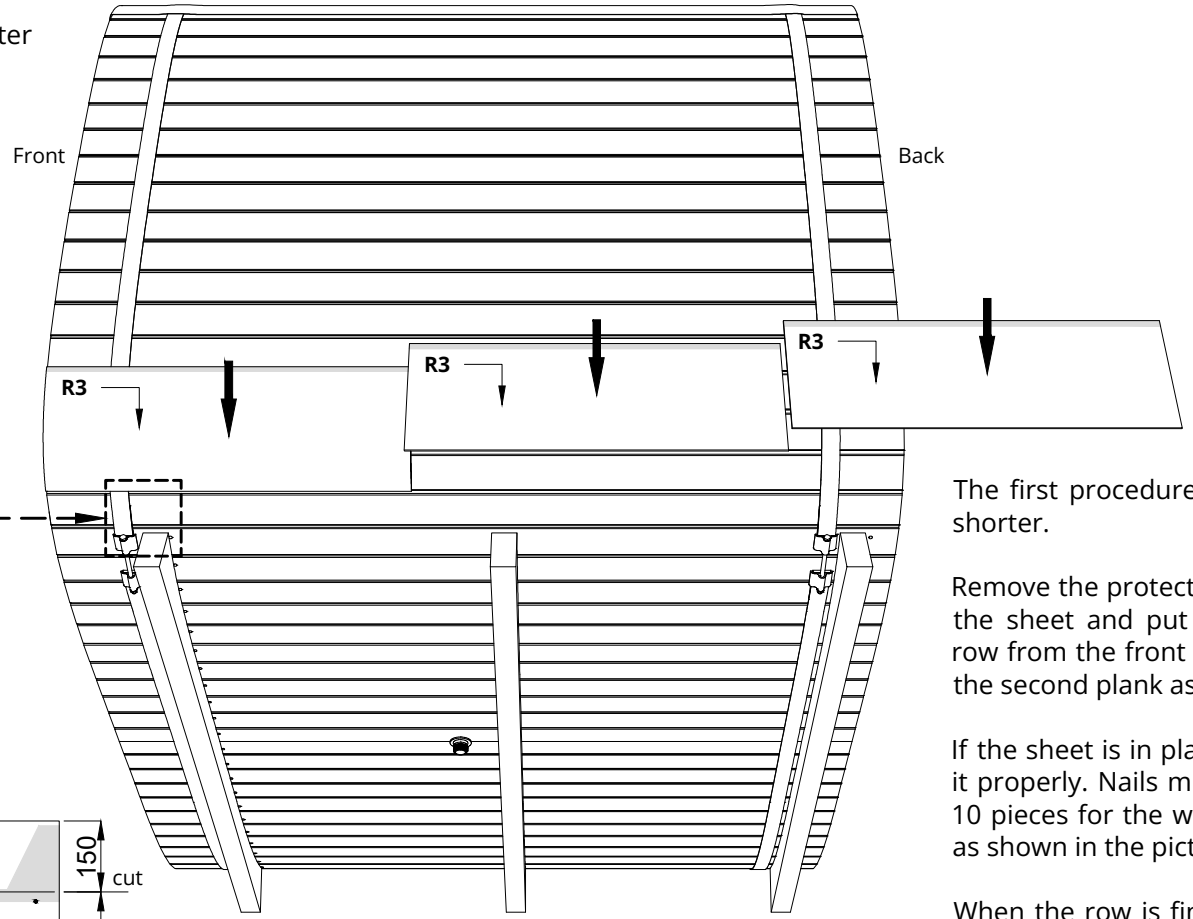

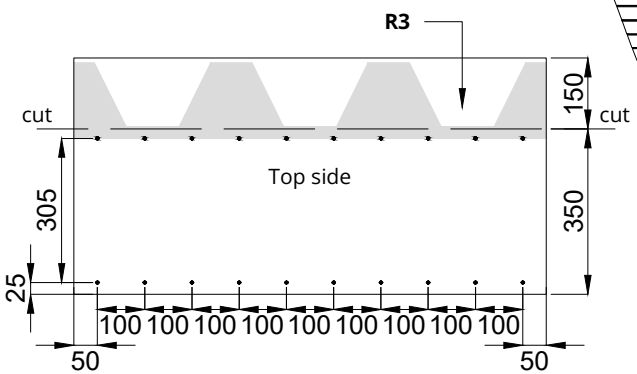

Repeat these steps on the other side as well!

The first procedure is to cut the sheet 150mm shorter.

Remove the protective films from the bottom of the sheet and put it in place by startding the row from the front and bottom of the sauna on the second plank as shown in the pictures.

If the sheet is in place, nails must be used to fix it properly. Nails must be placed every 100mm, 10 pieces for the whole sheet below and above as shown in the picture.

When the row is finished and extends over the edge, it must be cut off and the leftovers can be used to complete the row on the other side.

R5	Nail 2,5x25

The first sheet of the first row starts from the bottom and center of the side wall of the sauna

Sheets are self-adhesive for better adhesion use a heat source.

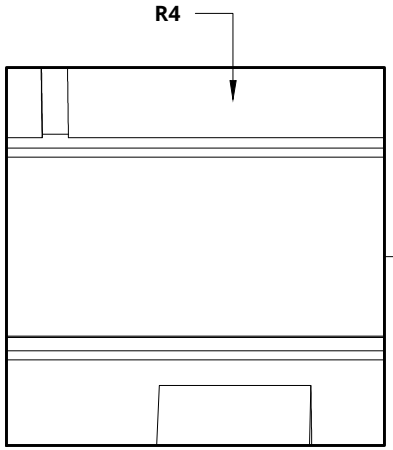

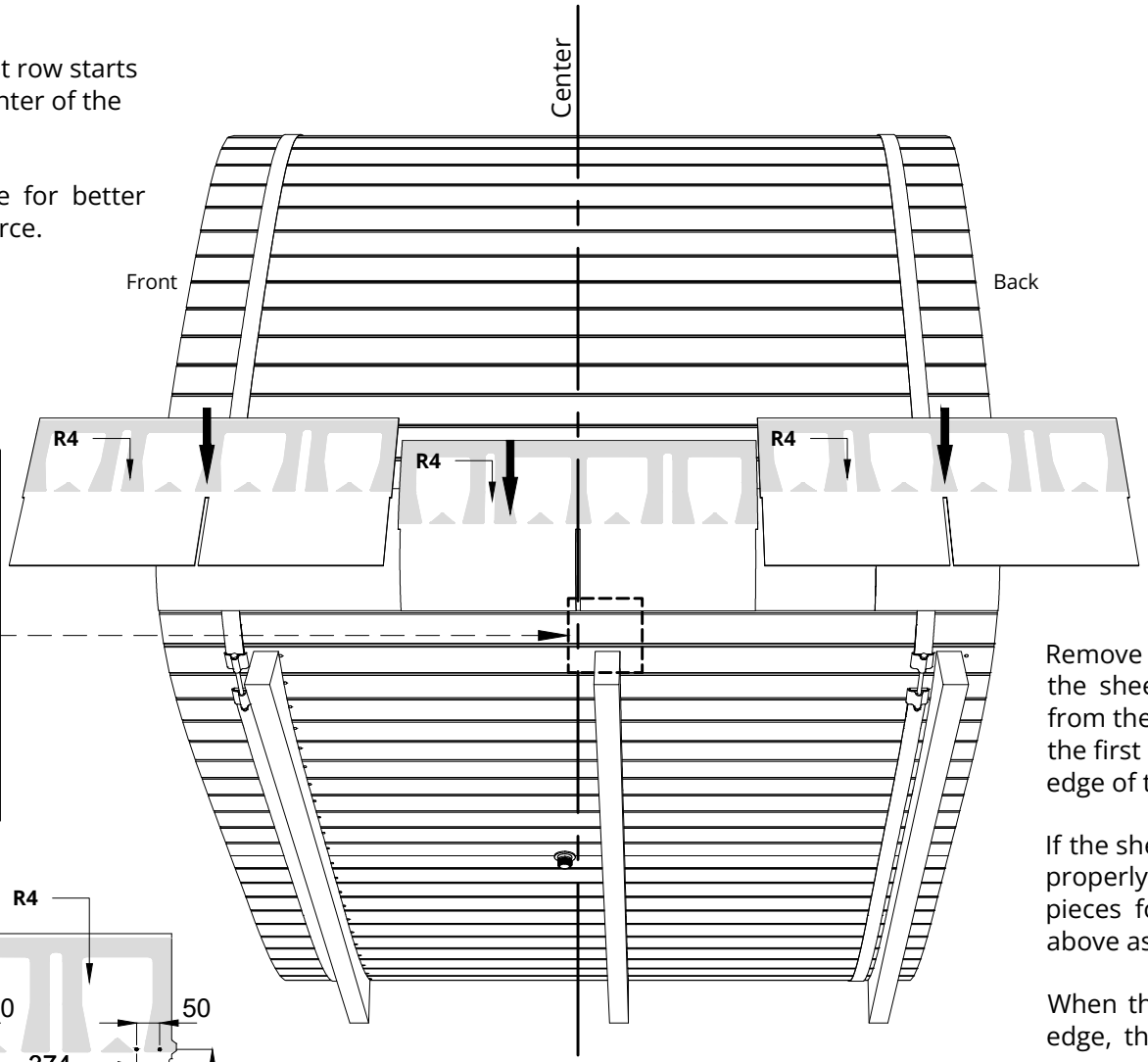

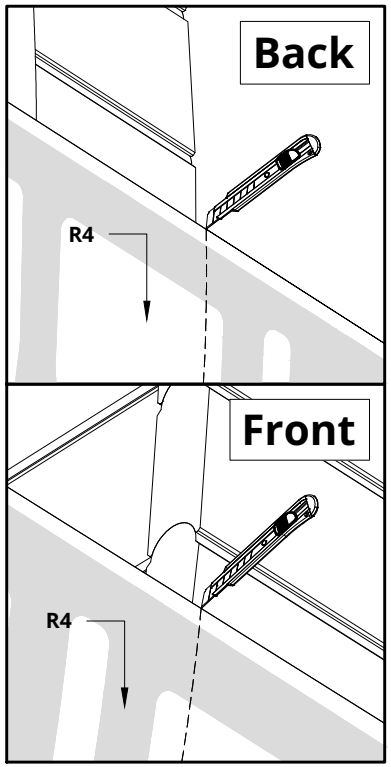

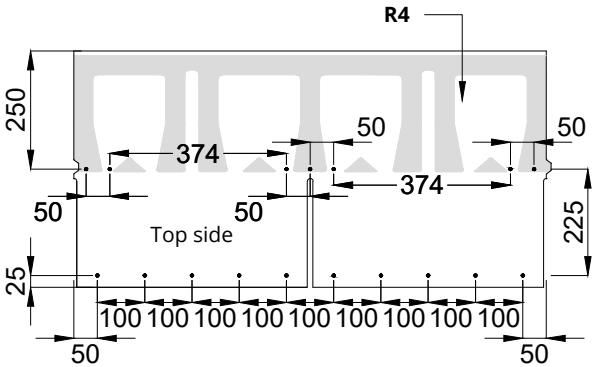

Repeat these steps on the other side as well!
(THE LOWER FASTENING NAILS ARE ONLY IN THE FIRST ROW)

Remove the protective film from the bottom of the sheet and put it in place by start the row from the bottom and center. The bottom edge of the first row sheet must be flush with the bottom edge of the base sheet shown in the pictures.

If the sheet is in place, nails must be used to fix it properly. Nails must be placed every 100mm, 10 pieces for the whole sheet belowand 7 pieces above as shown in the picture.

When the row is finished and extends over the edge, the excess must be cut off and the left-overscan be used in the following rows.

see page 26 for a recommendation on row arrangement.

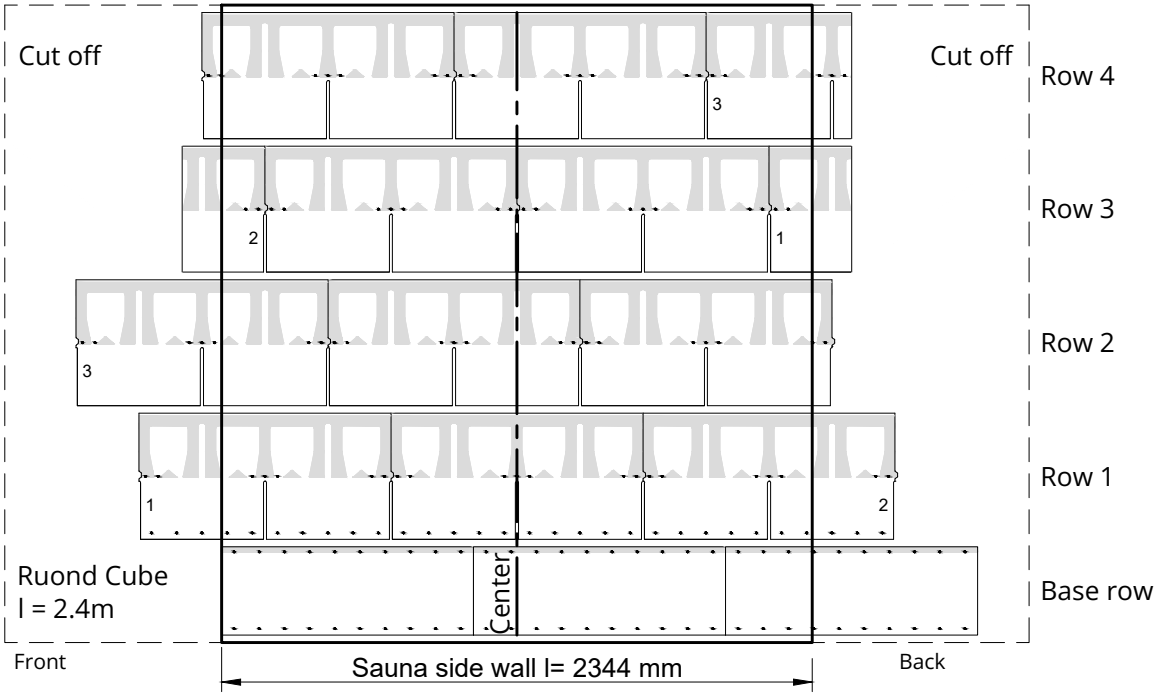

Bitumen roof sheet row arrangement for Round Cube 2.4 and 2.6

The base row is installed first, then the first row, etc. out to the center. The leaves that remain over the edge of the sauna wall are cut off and, if possible, used for other rows.

The base row starts at the front end of the sauna, row 1 always starts in the middle, the other rows are offset from the middle.

The layout pattern repeats every 4 rows.

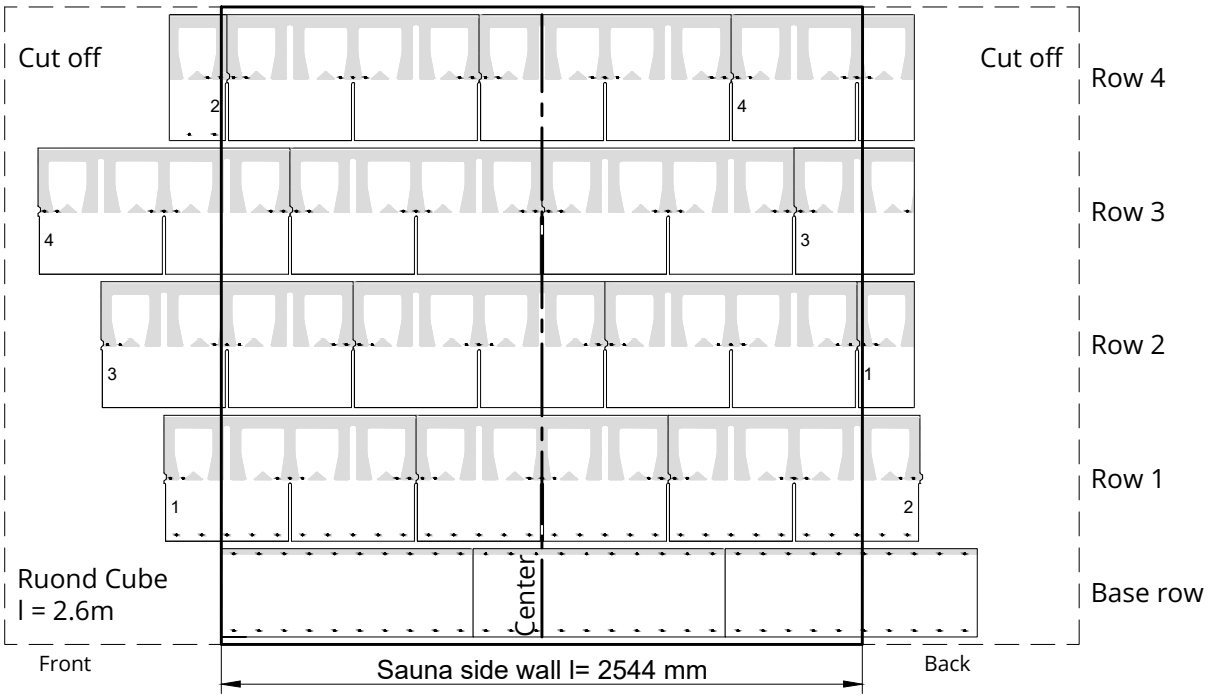

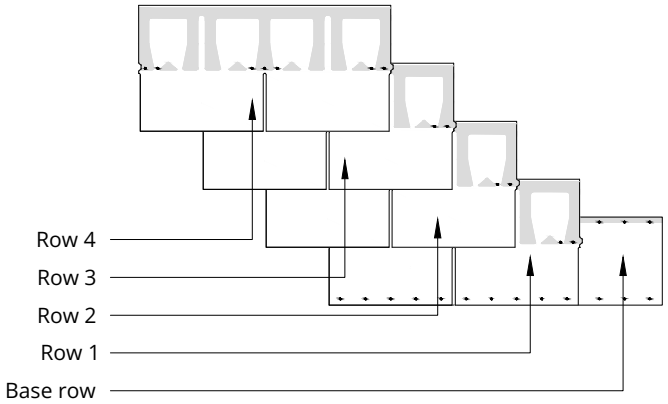

R5	Nail 2,5x25

The roof ridge must be placed in the middle, starting from the back end of the sauna or from the front end.

Sheets are self-adhesive for better adhesion use a heat source.

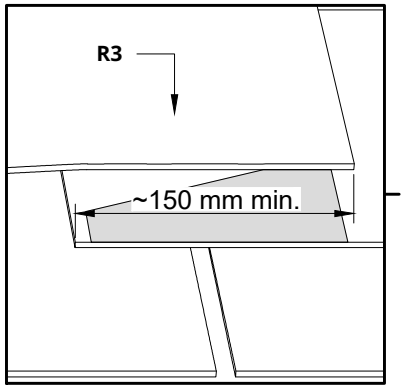

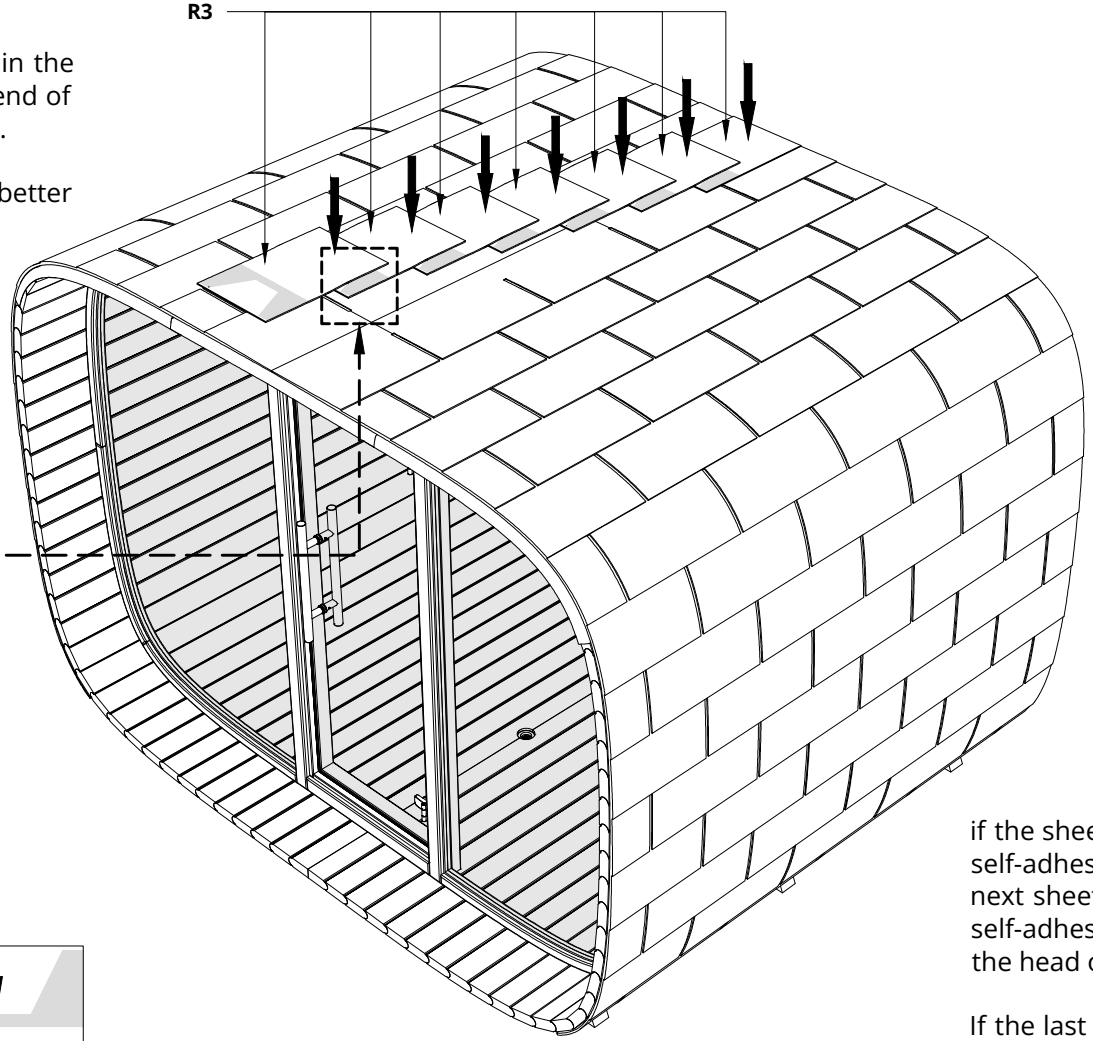

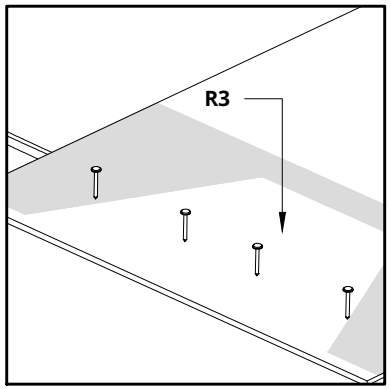

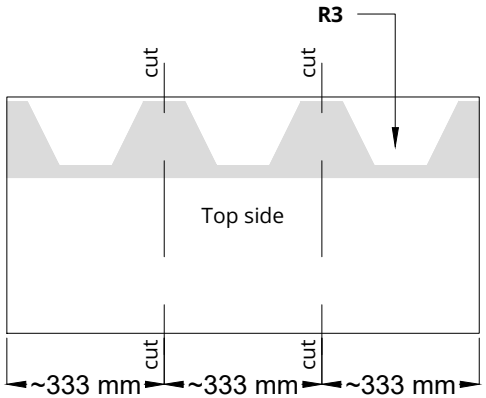

The first procedure is to cut the sheet into three pieces.

Remove the protective film from the sheet and put it in place by startding the ridge row from back end of the sauna or from the front end.

if the sheet is in place, fasten it with 4 nails on the self-adhesive spot as shown in the picture. The next sheet must be placed so that it overlaps the self-adhesive spot of the first sheet and covers the head of the nail min. length 150 mm.

If the last sheet extends over the edge, it must be cut off, and if the self-adhesive part remains visible, it must be covered with a suitable piece of excess, use bitumen silicone for fixing.

S7	Screws 4,5x80 for Spruce Screws 4,2x75 for Thermo	x60

NB! use a level

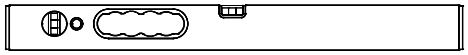

Installation of cover boards at the front end and at the back end of the sauna.

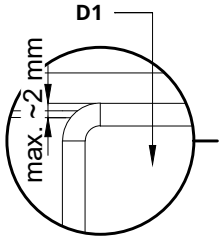

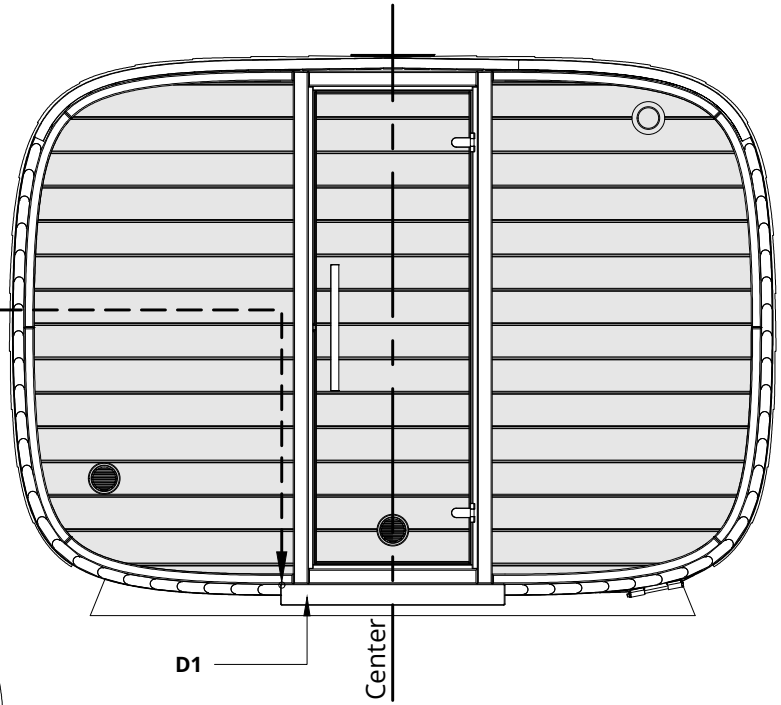

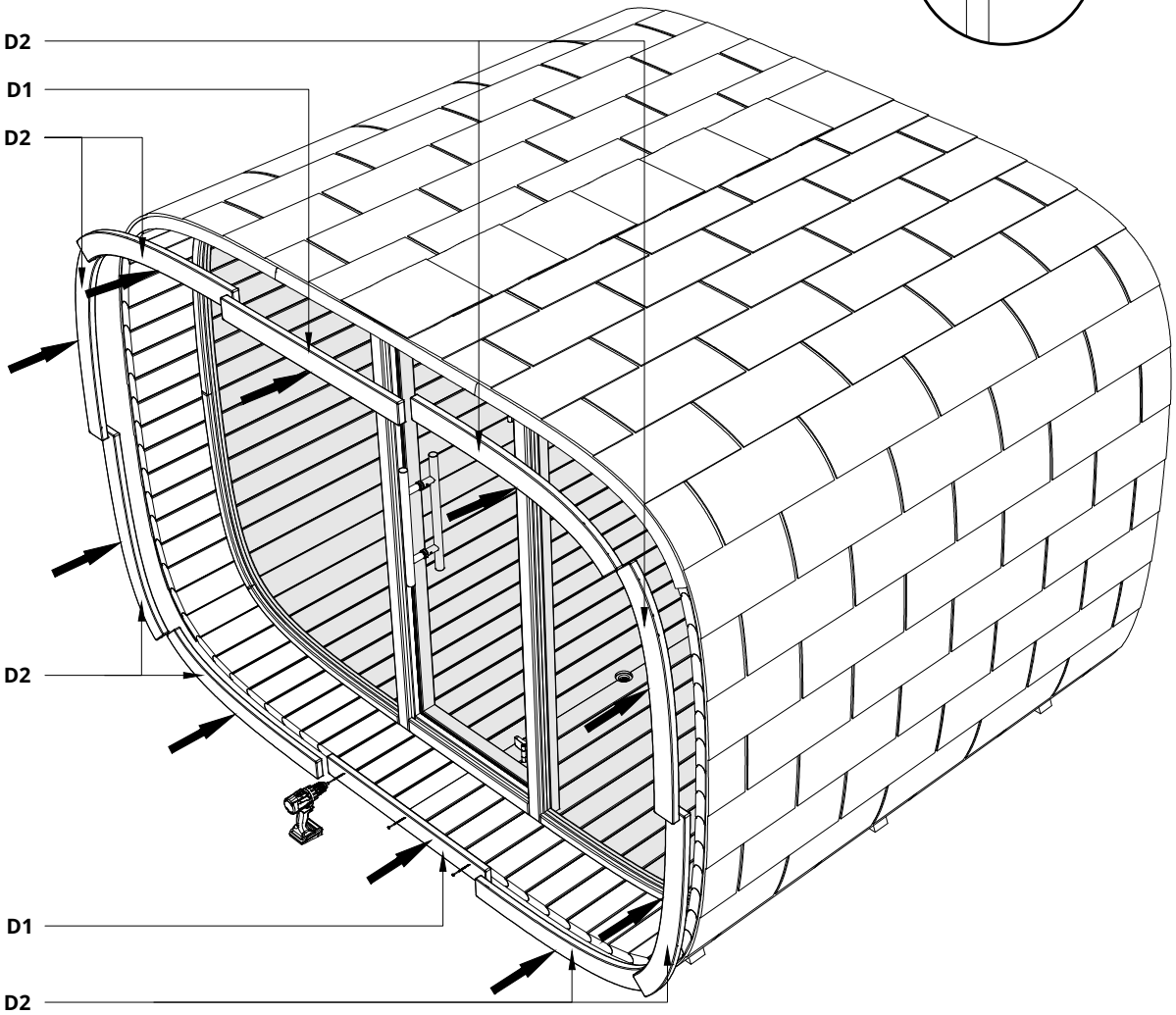

The installation of the cover boards is started from the bottom and the first cover board must be in the center at the front end and at the back end of the sauna.

The upper edge of the first cover board must be at the same height as the floor. It can also be a little higher than the floor level, but not more than 2 mm

Glue must be added to the lower 3 cover boards before screwing. each cover board is screwed with 3 screws.

If the front end of the sauna is done, the back end of the sauna must be done in the same way.

Please countersink the screw head!

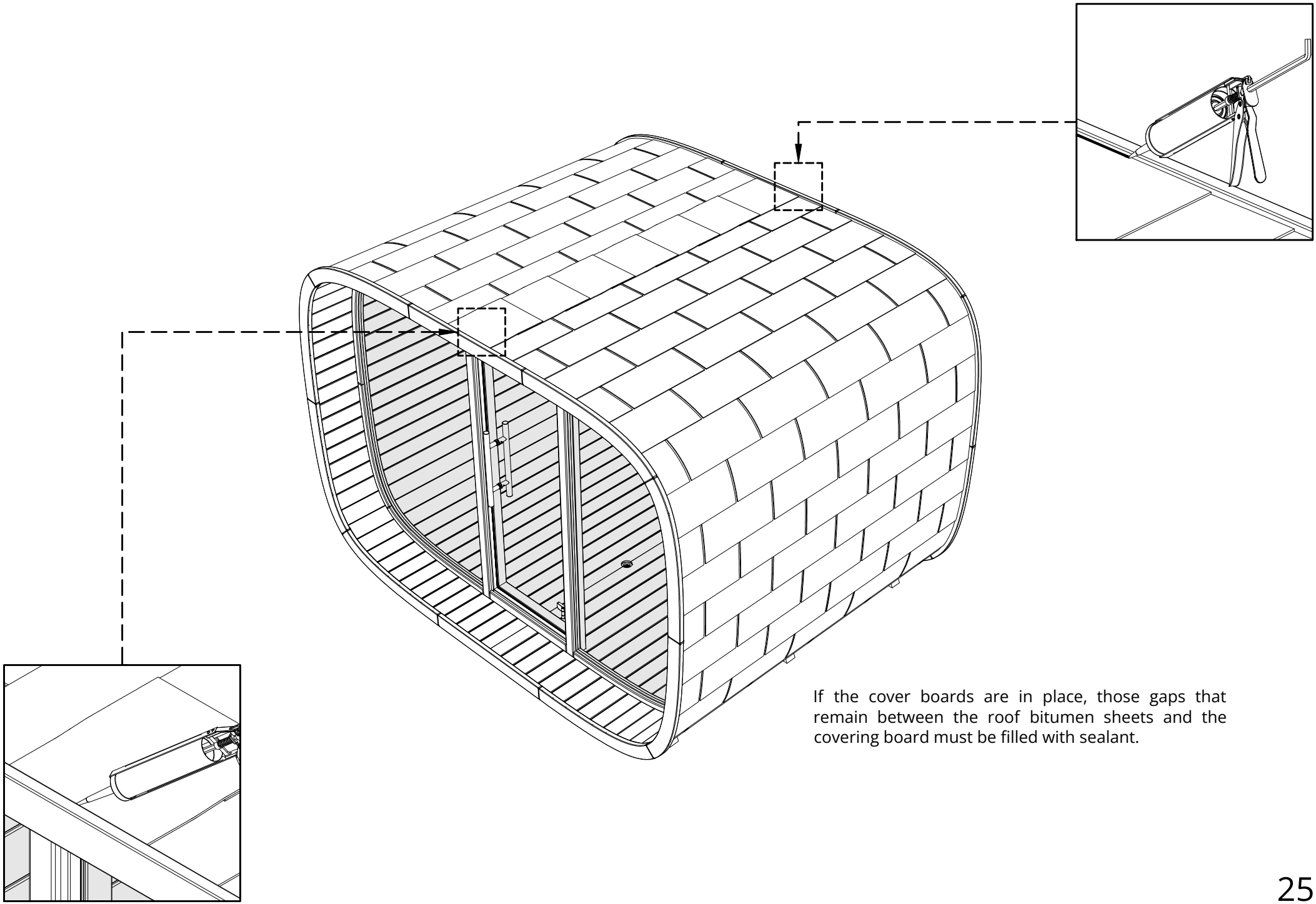

If the cover boards are in place, those gaps that remain between the roof bitumen sheets and the covering board must be filled with sealant.

S7	Screws 4,5x80 for Spruce Screws 4,2x75 for Thermo	x16

NB! use a level

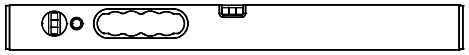

Notice!
Drill 4mm hole in the K.. square woods before screwing.

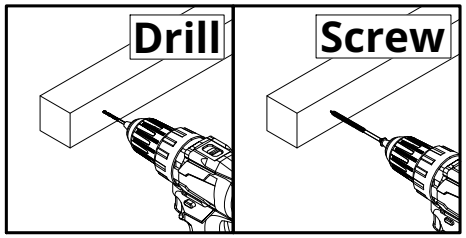

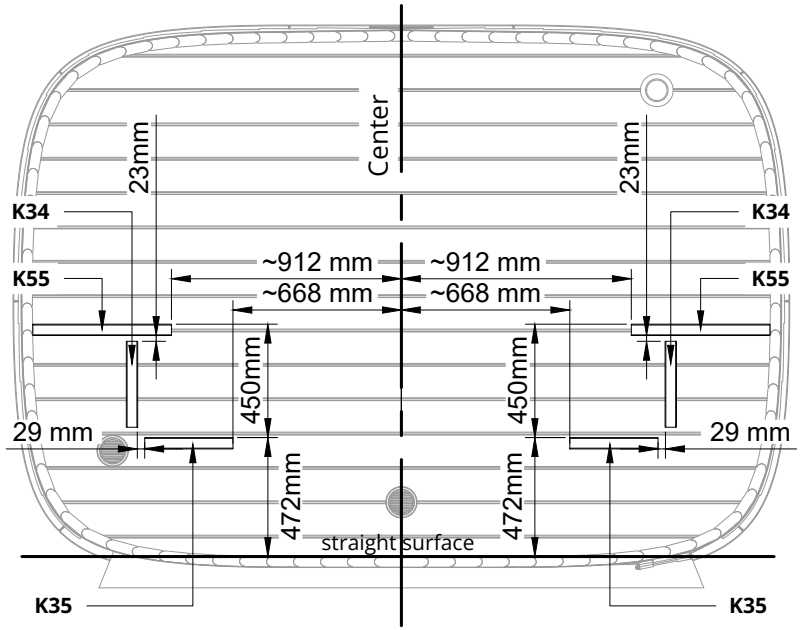

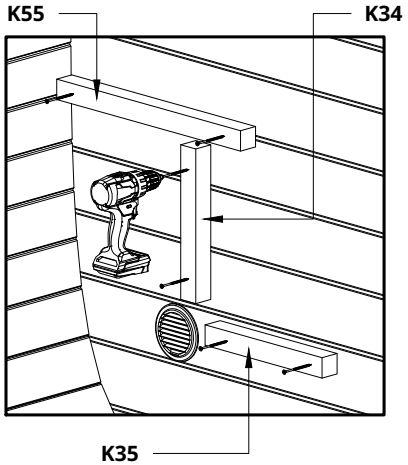

Height measurements are measured from a straight surface.

Please countersink the screw head!

First measure and install wall mount K35. Measure the height from straight surface and the distance from center. The upper edge height from the straight surface of K35 is shown in the picture.

Next measure and install K55. Measure the upper edge of the wall mount K55 from the wall mount K35 and the distance from center.

Next measure and install bench skirt wall mount K34. Measure the upper edge of the wall mount K34 and the outer edge depth distance from the wall mount K35. The K34 wall mount should be perpendicular to the K55 wall mount

Now measure and install K30 on both sides. Measure the height straight surface and distance from the back wall.

Before installing square wood K30, K34, K35 and K55, drill holes for screws. Add glue and then screw it to the wall and wipe off the excess glue.

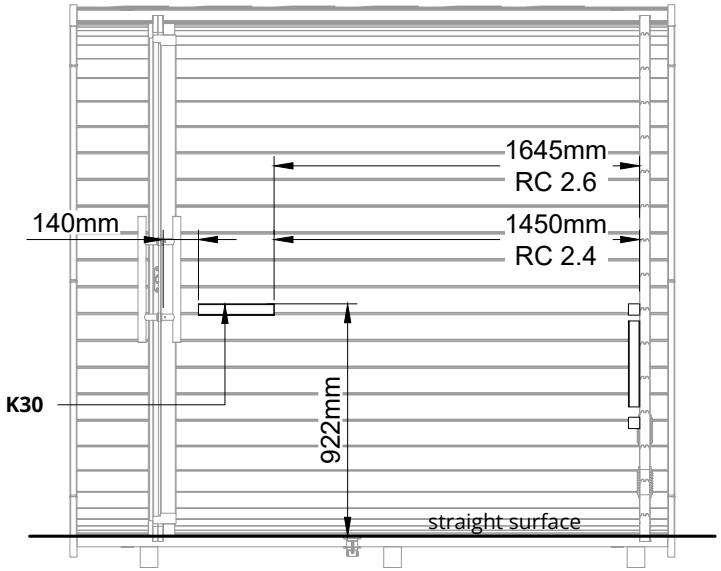

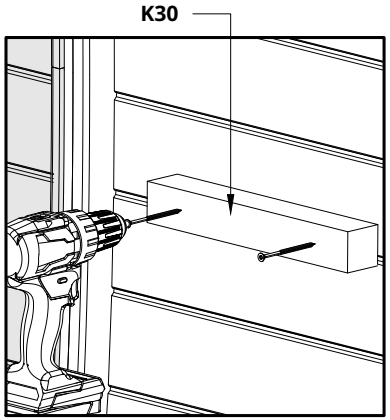

S5	Screws 4,5x60 for Spruce Screws 4,2x55 for Thermo	x4
S7	Screws 4,5x80 for Spruce Screws 4,2x75 for Thermo	x12

NB! use a level

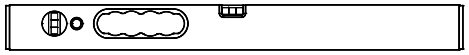

Notice!
Drill 4mm hole in the K10 square wood before screwing.

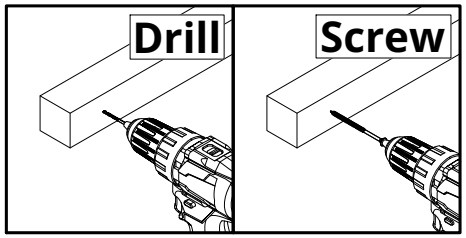

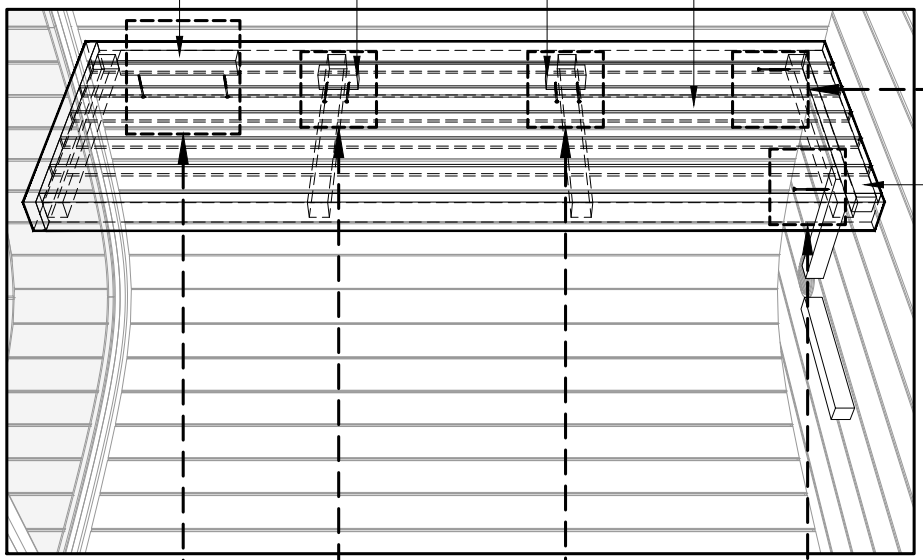

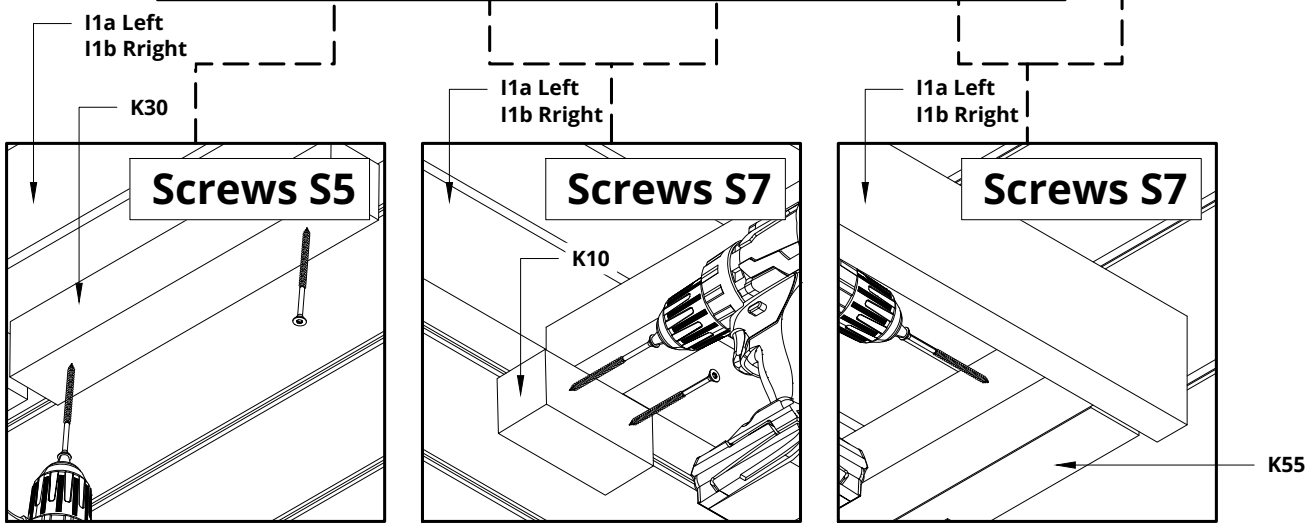

Install and fix the I1a upper bench to the wall mounts K55 with two S7 screws and K30 with two S5 screws.

Install some aids to keep the bench level.

Once the upper bench is attached, K10 must be installed next. K10 must be installed at the lower edge of the square wood attached under the bench and fixed to the side wall with two S7 screws, the locations are shown in the pictures.

Before installing square wood K10, drill holes for screws. Add glue and then screw it to the wall and wipe off the excess glue.

Repeat these steps on the other side as well!

S5	Screws 4,5x60 for Spruce Screws 4,2x55 for Thermo	x8

NB! use a level

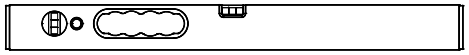

Notice! (Recommended)
Drill 4mm hole in the K.. square woods before screwing.

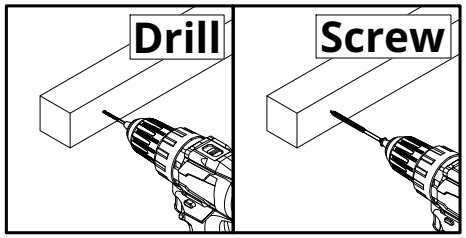

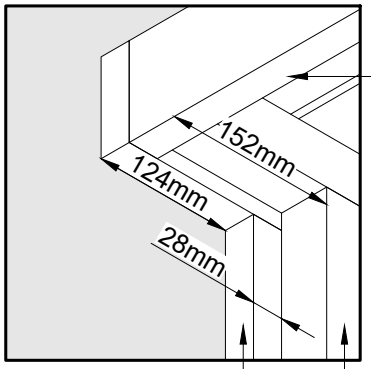

The measurement must be started from the lower edge of the square wood attached under the bench for square wood legs.
The square wood and cover board are longer, they must be cut to the correct size.
Please countersink the screw head!

Before installation, mark the distance of the square wood K90 from the outer edge of the bench. Measure from bench I1a down to the floor. Cut the K90 to size. If it is cut correctly, make sure that square wood K90 stays perpendicular to the bench when attaching it.

Before installing the cover board D3, mark the distance from the outer edge of the bench.

Measure from the marked point down to the floor. Cut the D3 cover board to size. If it is cut to size, fasten with two S5 screws.

make sure that cover board D3 stays too perpendicular to the bench and in parallel with K90 when attaching it to K90.

Repeat these steps on the other side as well!

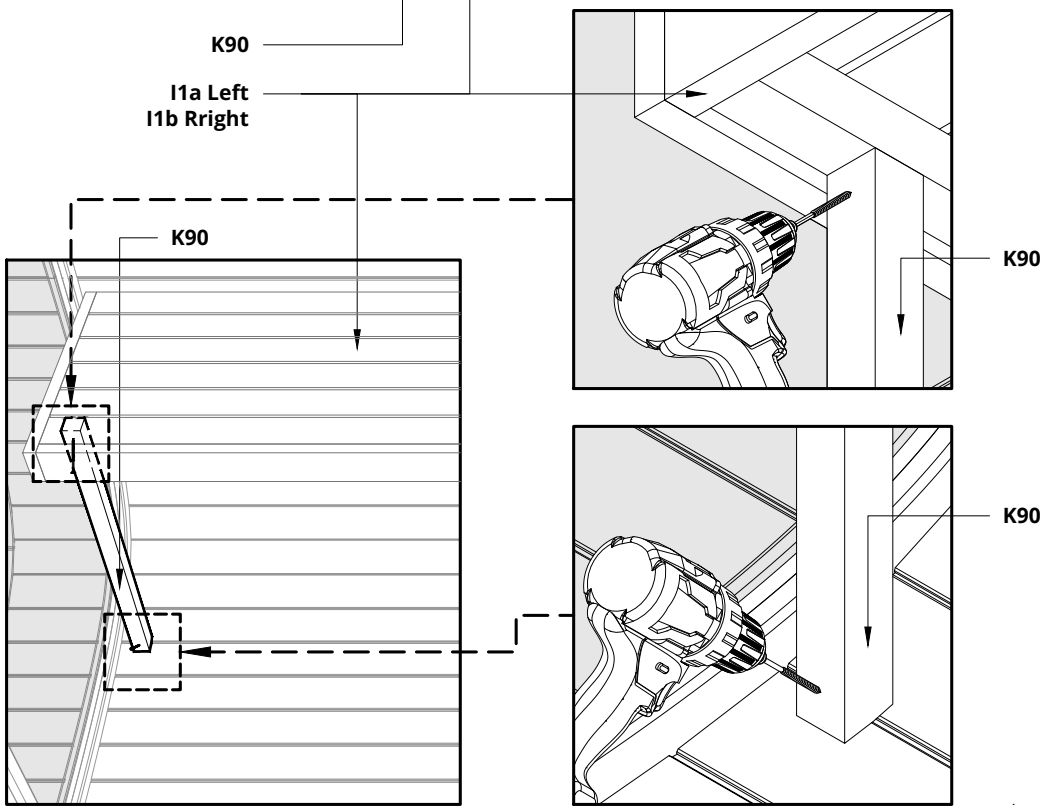

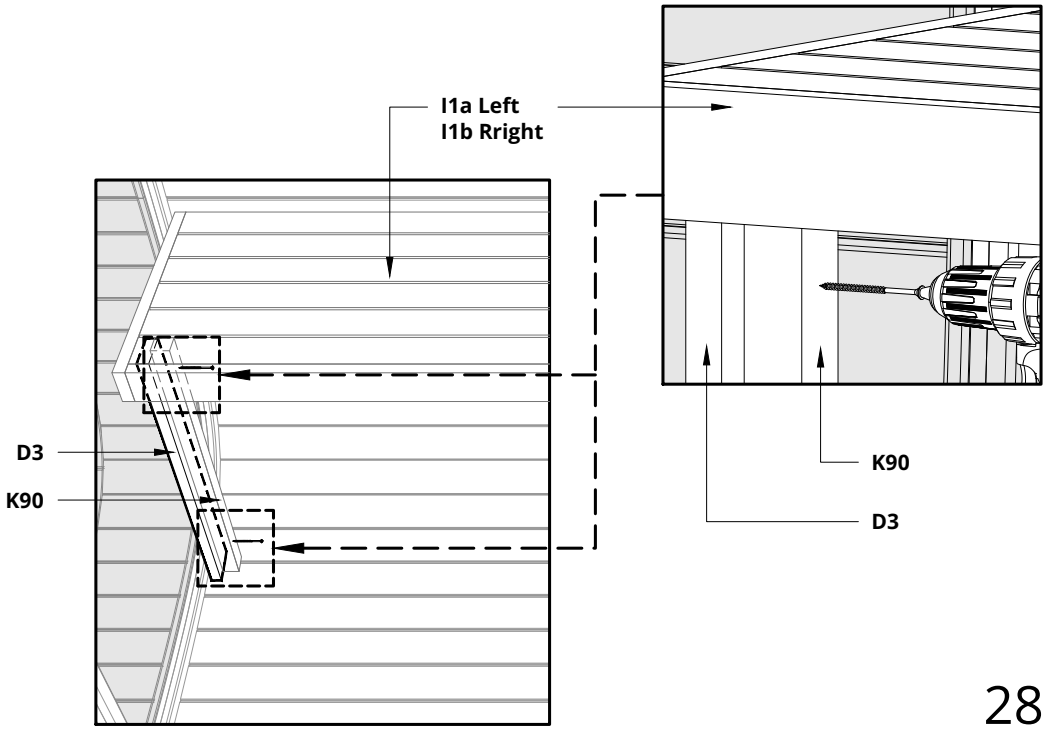

S5	Screws 4,5x60 for Spruce Screws 4,2x55 for Thermo	x4
S7	Screws 4,5x80 for Spruce Screws 4,2x75 for Thermo	x6

NB! use a level

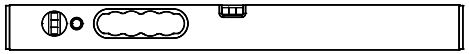

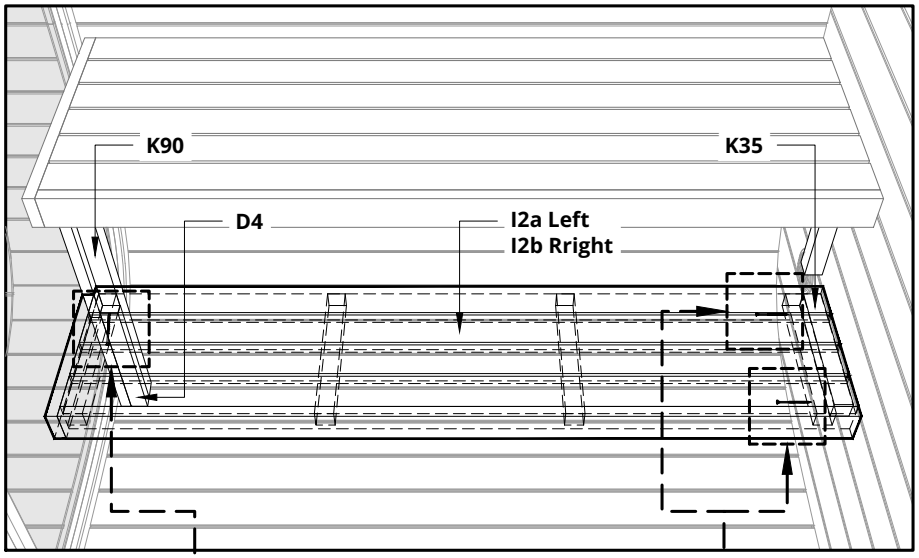

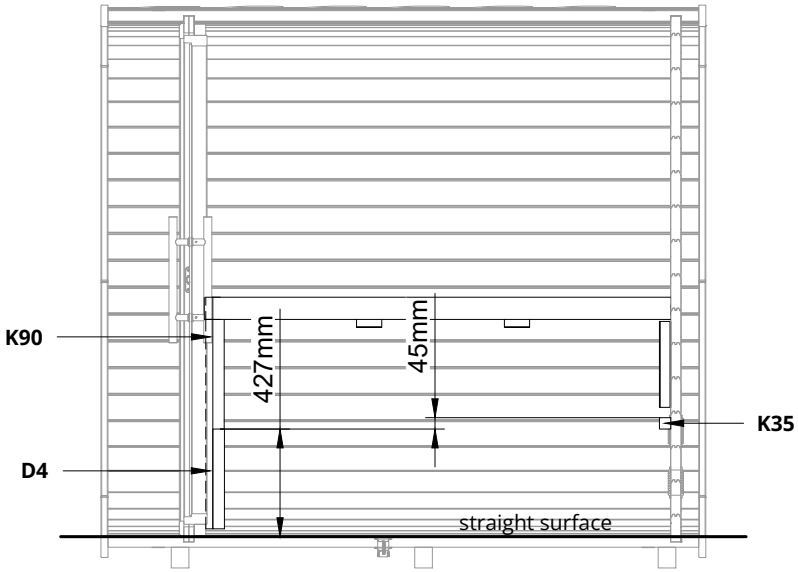

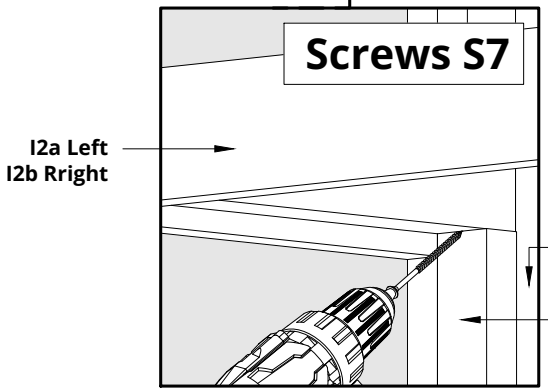

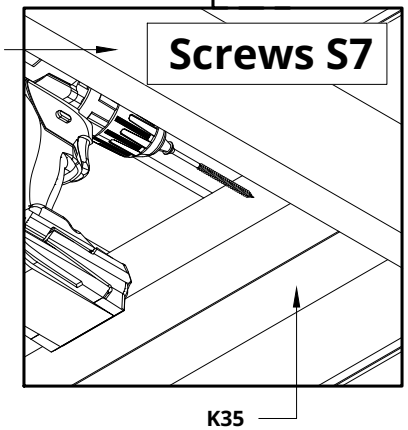

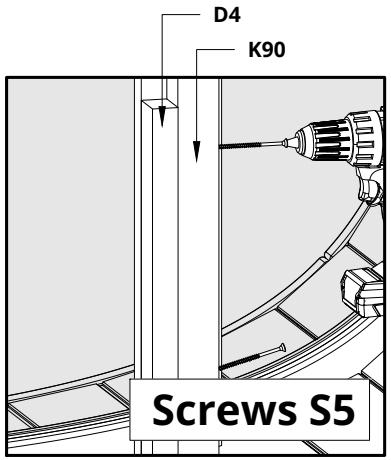

The cover board is longer, it must be cut to the correct size.
Height measurements are measured from a straight surface.

First install cover board piece D4. Mark the upper edge of D4 cover poard piece.

Measure from the marked point to the floor to get the measurement. Cut the D4 cover board piece to size.

Attach the D4 cover board piece to K90 square wood with two S5 screws.

Now install and fix the I2a bench to the wall mounts K35 with two S7 screws and to K90 with one S7 screw.

Install an aid to keep the bench level.

Repeat these steps on the other side as well!

S5	Screws 4,5x60 for Spruce Screws 4,2x55 for Thermo	x20

NB! use a level

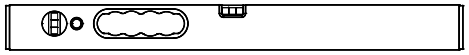

Notice!
Drill 4mm hole in the K.. square woods before screwing.

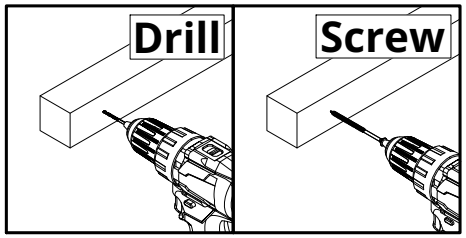

The measurement must be started from the lower edge of the square wood attached under the bench.
The square wood and cover board are longer, they must be cut to the correct size.

Please countersink the screw heads that are hidden behind the other part!

First measure and install the corner leg K45 of the middle bench I2a. Measure from the bench to the floor. Cut the K45 to size. If it is cut correctly, make sure that square wood K45 stays perpendicular to the bench when attaching it.

Next, install the two middle legs K45 of the middle bench I2a. Measure from the bench to the floor. Cut the K45 to size. If it is cut correctly, make sure that square wood K45 stays perpendicular to the bench when attaching it.

Now install cover boards D4 on the middle legs K45. Measure from the bench to the floor. Cut the D4 to size and install to the K45 legs with two screws each as shown in the picture.

Repeat these steps on the other side as well!

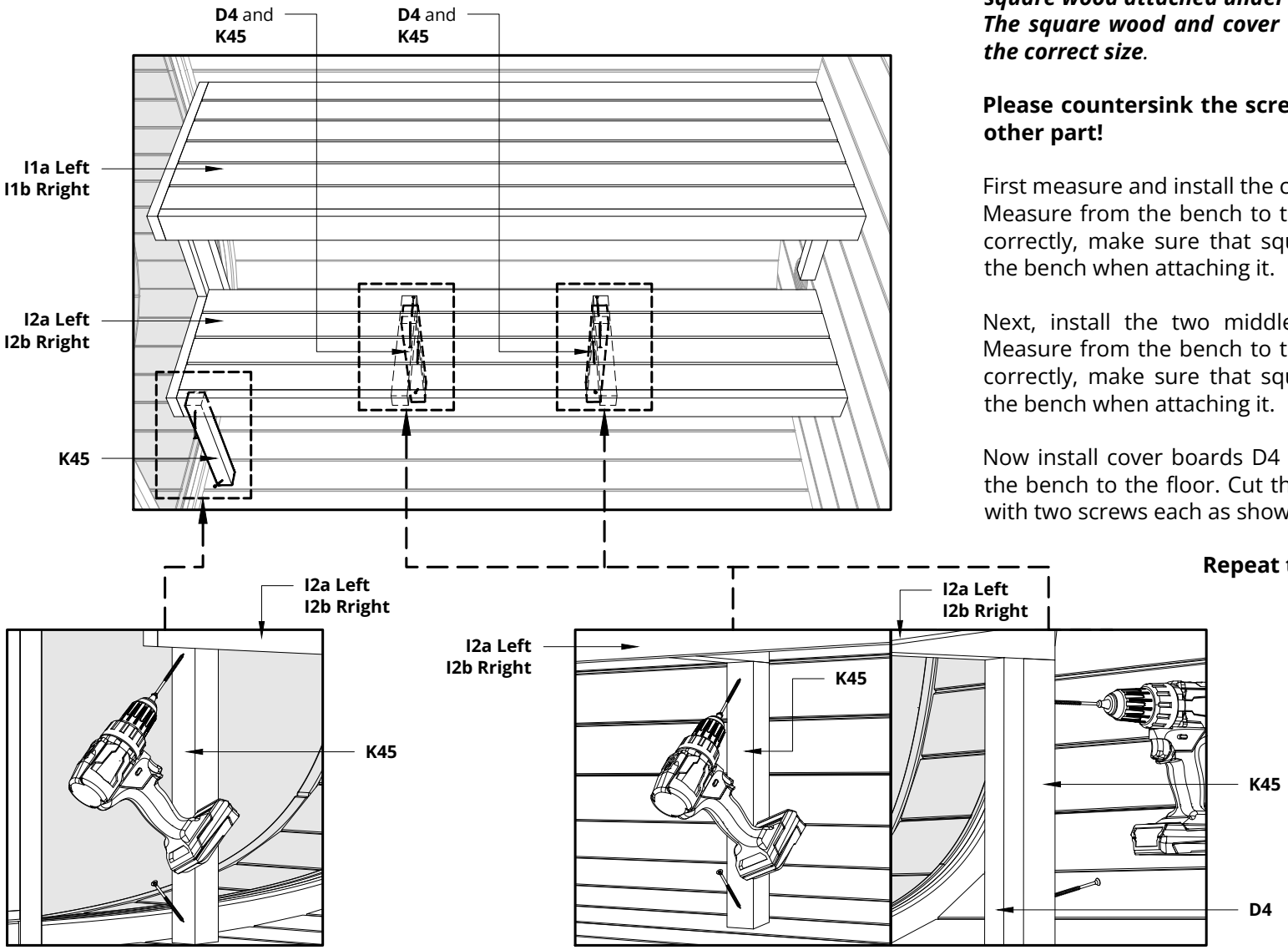

S5	Screws 4,5x60 for Spruce Screws 4,2x55 for Thermo	x16

NB! use a level

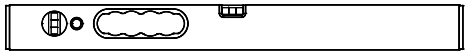

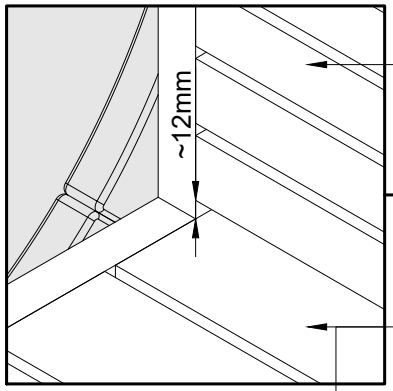

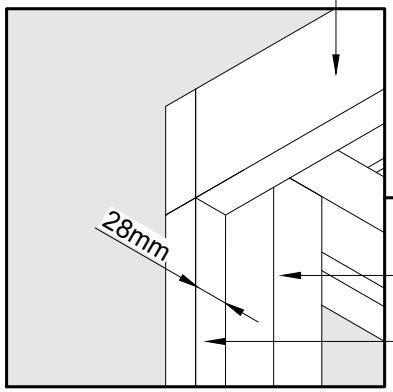

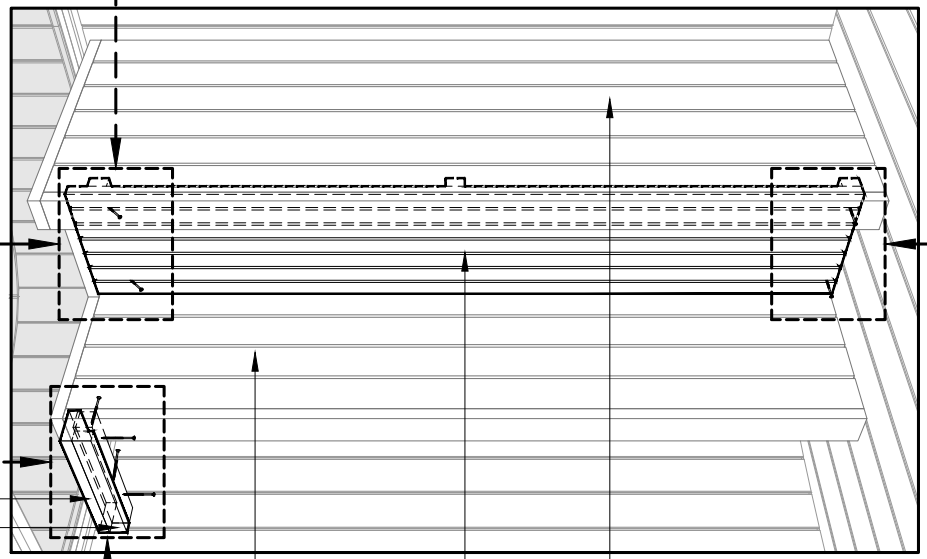

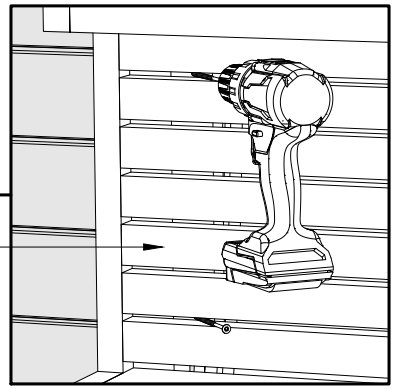

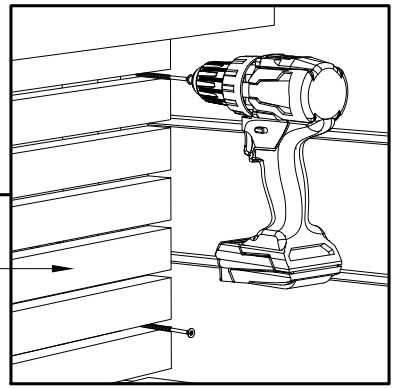

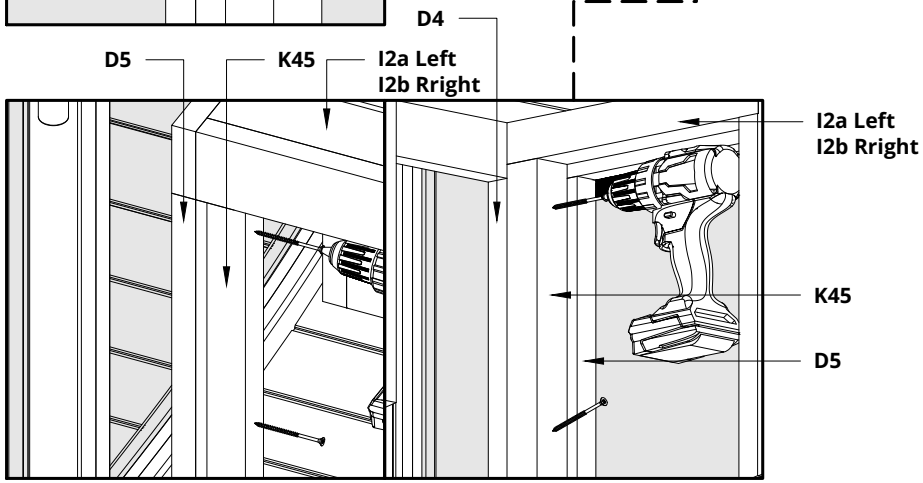

The cover board are longer, they must be cut to the correct size.

First measure and install the corner leg K45 cover boards D4 and D5. Measure from the bench to the floor. Cut the D4 and D5 to size. First install cover board D4 and then D5. Both are attached with two screws to the corner leg **K45 square wood**.

Next install the bench skirt I3. it must be placed so that there is a small gap between the lower edge and the middle bench I2a. Fasten with four screws.

Repeat these steps on the other side as well!

S2	Screws 3x40	x6
S5	Screws 4,5x60 for Spruce Screws 4,2x55 for Thermo	x6

NB! use a level

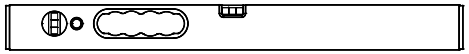

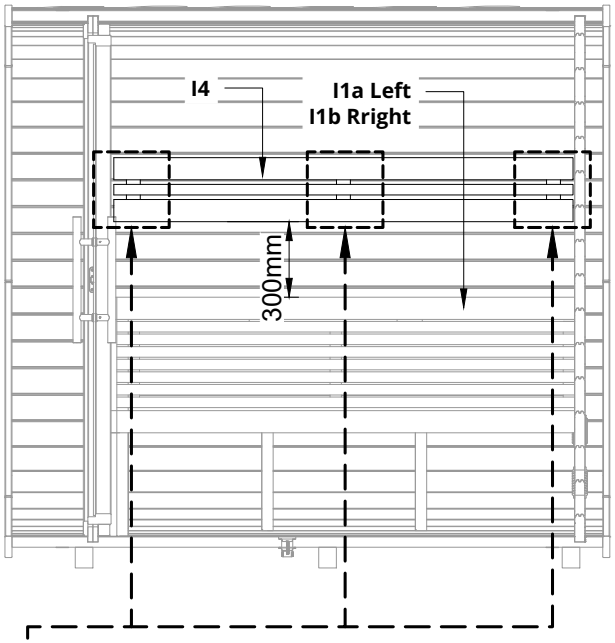

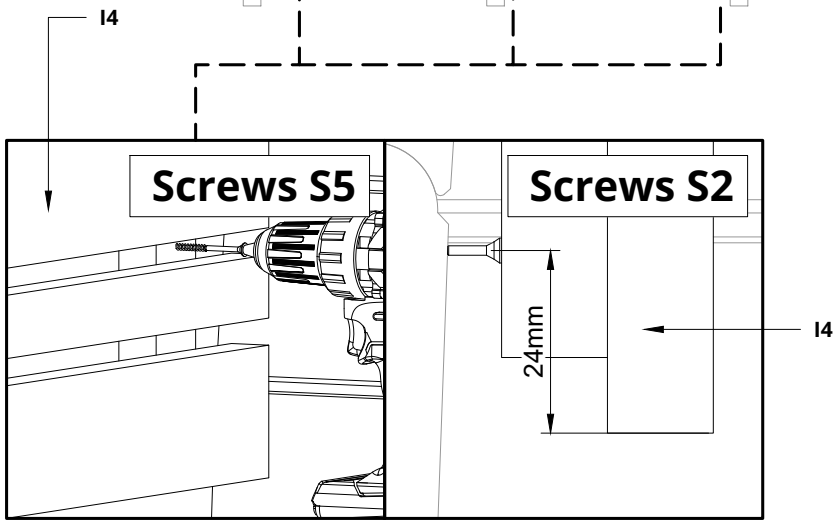

The height of the lower edge of the backrest is shown in the picture.

When you install the bench backrest I4. It needs to be set from the bottom edge as the wall is not flat. For leveling, use S2 screws, putting them behind the block with which the backrests are against the wall. at the beginning, screw the screws in, leaving 20mm out, then, if necessary, turn them inward or outward. Or use spacer blocks.

Repeat these steps on the other side as bench backrest I4 well!
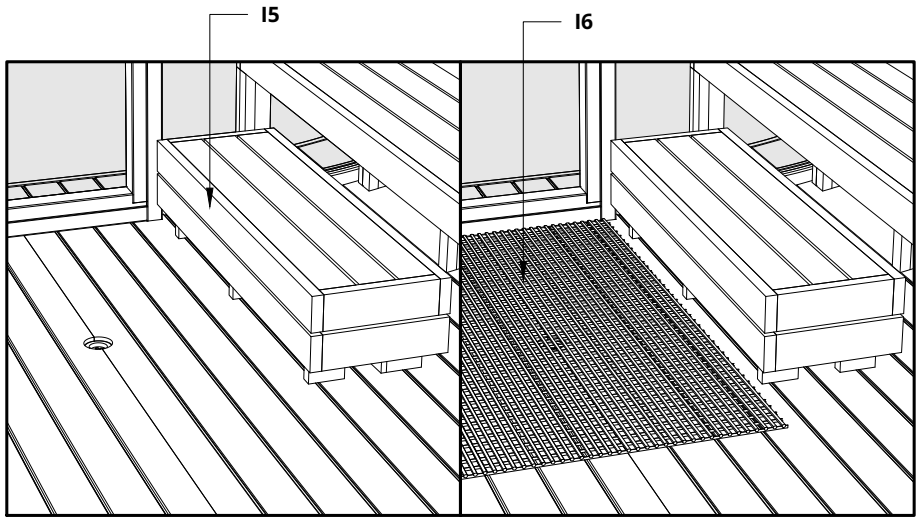
Next, place the step bench I5 on the left and also on the right, then place the floor mat.